PTFE Seal Design Guide

aerospace
climate control
electromechanical
filtration
fluid & gas handling
hydraulics
pneumatics
process control
sealing & shielding

Parker Prädifa

ENGINEERING YOUR SUCCESS.

Contents

Contents	Page
1. Introduction	5
2. When to use PTFE seals	7
3. PTFE product lines	11
4. FlexiSeals®	21
5. Slipper seals	109
6. Anti-extrusion rings	163
7. Guiding tapes	171
8. Application data sheet	184
9. Appendices	187

Warning – User responsibility

This document and other information from Parker Hannifin Corporation, its subsidiaries and authorized distributors provide product or system options for further investigation by users having technical expertise.

The user, through its own analysis and testing, is solely responsible for making the final selection of the system and components and assuring that all performance, endurance, maintenance, safety and warning requirements of the application are met. The user must analyze all aspects of the application, follow applicable industry standards, and follow the information concerning the product in the current product catalogue and in any materials provided from Parker or its subsidiaries or authorized distributors.
To the extent that Parker or its subsidiaries or authorized distributors provide component or system options based upon data or specifications provided by the user, the user is responsible for determining that such data and specifications are suitable and sufficient for all applications and responsibly foreseeable uses of the components or systems.

Range of Application

Our seals may only be used within the application parameters stated in our documents as regards compatibility with contact media, pressures, temperatures and time of storage. Application or use outside of the specified application parameters as well as the selection of different compounds by mistake may result in damage to life, the environment and/or equipment and facilities.

The information contained in our publications is based on know-how developed over decades of experience in the manufacturing and application of seals. Despite this experience, unknown factors arising out of the practical application of seals may considerably affect the overall applicability of this information in such a way that the recommendations provided herein are not to be considered generally binding.

The data for working pressure, working temperature, and surface speed stated in the columns represent maximum values and are interrelated. Under extreme working conditions it is recommended not to use all maximum values simultaneously.

For special requirements (pressure, temperature, speed, etc.) please contact our Consultancy Service, so that suitable materials and/or designs can be recommended.

Compatibility of Seals and Operating Media / Cleaning Agents

Due to the great diversity of operational parameters affecting fluidic devices and their impact on seals, it is absolutely imperative that manufacturers of these devices approve seals for functional and operational suitability under field conditions.

Furthermore, in view of the consistent increase of newly available media used as hydraulic oils, lubricants, and cleaning agents, special attention is invited to the aspect of compatibility with sealing elastomers currently in use.

Additives contained in base media in order to enhance certain functional characteristics may affect compatibility characteristics of sealing materials.

For this reason, it is imperative that any product equipped with our seals be tested for compatibility with operational media or cleaning agents approved or specified by you either at your plant or by means of field tests prior to any serial application.

We kindly ask you to comply with this notice since, as a manufacturer of seals, we are not in a position, as a matter of principle, to perform simulations regarding any and all conditions present in the final application nor of knowing the composition of the operational media and cleaning agents used.

Design modifications

We reserve the right to make design modifications without prior notification.

Prototypes and samples

Prototypes and samples are produced from experimental moulds. The subsequent series production may differ in production techniques from the prototype production unless specific agreement to the contrary was reached beforehand.

Delivery and services

The delivery guarantee (availability of moulds) for individual dimensions of our range of products is limited to a period of 7 years.

Damaged moulds, including standard items, can only be replaced in case of sufficient demand. Most of the dimensions stated in this catalogue are normally (but not as a matter of course) available ex stock.

For the production of smaller quantities, special compounds, and in case of special production procedures, we reserve the right of charging a prorated share of set-up costs.

All deliveries and services are subject to our terms.

Quality Systems

Our manufacturing sites are certified according to ISO 9001 resp. ISO/TS 16949.

Copyright

All rights reserved by Parker Hannifin Corporation. Extracts may only be taken with permission. Modification rights reserved.

Validity

This edition supersedes all prior documents.

1. Introduction

Parker PTFE seals and sealing solutions are used in the more traditional sealing markets like pneumatics and hydraulics as well as in aerospace, energy, oil and gas, the life sciences sector and in the field of renewable energies.

PTFE seals are suitable for use in harsh environments with temperatures ranging from cryogenic to 300 °C in combination with highly aggressive media. Mixing virgin PTFE powder with different fillers gives PTFE specific properties.

For high-speed dynamic applications or extreme pressures, Parker's proprietary Polon® PTFE grades and special seal designs are used. Sealing elements or backup rings made from other engineering polymers such as PEEK, PAI or PI complement the product range for applications where combined pressure and temperature loads push the limits of PTFE-based seals. Continuous in-house research and development in the field of ultra-high-strength thermoplastic composite materials provides solutions for even the most demanding application requirements.

In-house machining technology enables the production of PTFE seals in diameters ranging from 0.5 mm all the way to 3.5 meters for very large cylinders. Clean-room manufacturing facilities are available as well for respective requirements, for instance in the medical and life sciences sector.

The three Parker Prädifa PTFE manufacturing locations in Denmark, Belgium and the Czech Republic specialize in different activities. The plant in Helsingør, Denmark, produces slipper seals and guiding tapes and houses the moulding department, with isostatic and compression moulding presses capable of producing PTFE tubes up to 2-metre diameters. The Belgian plant in Boom is the Flexi-Seal® centre of excellence and home to the PTFE engineering team and sealing lab. The plant in Sadská, Czech Republic, is a high-volume manufacturing facility and specializes in products for the automotive market.

This design manual is intended as a guide. In case of special operating conditions or requirements, please contact our consultancy service or your local sales representative.

Engineering your success!

Fig. 1.1 – PTFE powder, semi-finished shape and final machined product.

Seals made from PTFE (Polytetrafluoroethylene) are used where many other sealing materials (like elastomers, PUR, fabric materials, etc.) fail to meet the required temperature range, chemical resistance or friction and wear requirements.

PTFE was discovered by accident in 1938 by Dr. Roy J. Plunkett of Du Pont's Jackson laboratory in New Jersey, USA. While investigating gases related to fluorinated refrigerants, he found that one sample left overnight in a pressurized storage cylinder had polymerised spontaneously to a white, waxy solid. This solid proved to have a unique composition with remarkable properties. The molecular structure of PTFE is based on a linear chain of carbon atoms which are completely surrounded by fluorine atoms. The carbon-fluorine bonds are among the strongest occurring in organic compounds. As a result, PTFE has

- **Thermal stability across a wide temperature range**
  PTFE's high melting point (342 °C) and morphological characteristics allow components made from the resin to be used continuously at service temperatures up to 260 °C. Above this temperature the components' physical properties tend to decrease, causing heat-aging and material degradation.
  PTFE is used at cryogenic temperatures to seal critical media such as liquid nitrogen (-196 °C), liquid hydrogen (-253 °C) and liquid helium (-269 °C).
  PTFE has the unique ability to resist material degradation, heat-aging and alteration in physical properties during temperature cycling.

- **Low friction/dry running capability**
  PTFE has the lowest friction coefficient of any known solid. It has self-lubricating capabilities, offering continuous dry running ability in dynamic sealing applications.

- **Extreme chemical resistance**
  The intrapolymer chain bond strengths of PTFE preclude reaction with most chemicals, thereby making them chemically inert at elevated temperatures and pressures with virtually all industrial chemicals and solvents. Only a few media are known to react with PTFE: alkali metals, fluorine and a few fluoro-chemicals such as chlorine tri-fluoride and oxygen difluoride.
  PTFE is suitable for contact with food and satisfies FDA requirements.

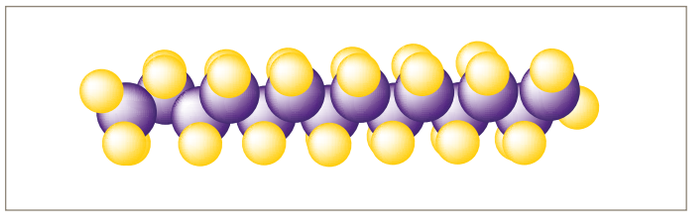

Fig. 2.1 – Molecular structure of PTFE (-CF_2-CF_2-).

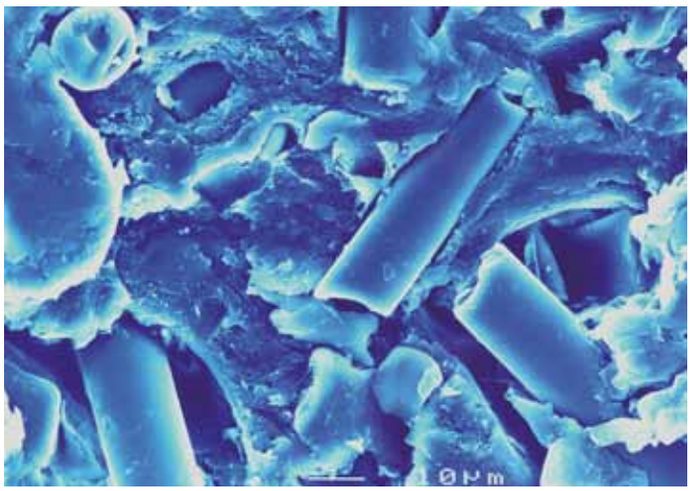

Fig. 2.2 – Microscopic picture of fibre-filled PTFE.

It is clear that from a sealing point of view, these unique characteristics give PTFE capabilities that exceed those of conventional elastomeric sealing materials.
Other outstanding properties are:

- **Reduced stick-slip**

- **Unlimited shelf life**
  PTFE does not age over time and is not affected by ultraviolet light.

- **No explosive decompression**
  PTFE is not susceptible to saturation of high-pressure gas that can expand violently and cause explosion of the material when the pressure is suddenly removed.

- **No swelling due to moisture absorption.**

- **Safe for use in vacuum conditions**

- **Excellent electrical properties**
  High dielectric strength, low dielectric constant and very high electrical resistance.

2. When to use PTFE seals

The effect of fillers

In spite of its remarkable properties pure, unfilled or virgin PTFE is inadequate for a number of more demanding engineering applications.
In particular, its cold flow or creep behaviour precluded the use of PTFE in mechanical applications. Even at room temperature, PTFE experiences a significant deformation over time when it is subjected to a continuous load.
Also, virgin PTFE has hardly any resilience and wears quickly despite its low coefficient of friction.
In the 1960's, the addition of fillers was found to improve a number of physical properties, particularly creep and wear rate. Most fillers are stable up to 400 °C, so they do not restrict use in high temperatures.

Listed below are some common filler elements and their effect on the physical properties of the PTFE compound.

Glass fibre
Glass fibre is a commonly used filler element with a positive impact on creep performance of PTFE, which is reduced at low and high temperatures. It also adds wear resistance and offers good compression strength. This additive is chemically inert except in the presence of hydrofluoric acid and strong bases. It has little effect on electrical properties.

Carbon and carbon-graphite
Carbon reduces creep, increases hardness and elevates the thermal conductivity of PTFE. Wear resistance of carbon filled compounds improves particularly in combination with graphite. Carbon is one of the most inert fillers except in oxidizing environments where glass performs better.
Carbon provides some electrical conductivity to PTFE. PTFE filled with carbon is typically used in pneumatic sealing applications.
Compounds with carbon in combination with graphite are the preferred materials for non-lubricated applications.

Carbon fibre
The addition of carbon fiber to PTFE changes its properties in the same way as glass fibre does. It lowers creep, increases flex and compressive modulus and raises hardness. In general, less carbon fibre than glass fibre is needed to achieve the same effect. The coefficient of thermal expansion is lowered and thermal conductivity is higher for compounds of carbon fibre filled PTFE. Wear rate decreases when carbon fibre parts are lubricated with water.
Carbon fibre is chemically inert and can be used in strong bases and hydrofluoric acid.

Graphite
Graphite is a crystalline modification of high-purity carbon. Graphite filled PTFE has one of the lowest coefficients of friction due to the low friction characteristics of graphite. It has excellent wear properties, particularly against soft mating surfaces and displays high load-carrying capability in high-speed contact applications.
Graphite is chemically inert which enables its use in corrosive media.

Bronze
Bronze is a common metallic filler. Large quantities (40 to 60 % by weight) of bronze reduce deformation under load and raise the thermal and electrical conductivity of PTFE compounds. These two characteristics are beneficial to applications where a part is subjected to load at extreme temperatures.
Bronze filled PTFE offers excellent extrusion resistance caracteristics. Bronze is an alloy of copper and tin and can be attacked by certain chemicals. Oxidation of the bronze can result in a discolouration of the finished part without impacting on the quality of the product.
PTFE filled with bronze is widely used in hydraulic rod and piston seal applications.

Molybdenum disulfide (MoS_2)
Molybdenum disulphide increases the hardness and stiffness of PTFE while decreasing friction. It has little effect on its electrical properties.
Chemically, is largely non-reactive and dissolves only in strong oxidizing acids.
It is normally used in small weight percentages and in combination with other fillers such as glass fibre.

Aromatic polyester
Aromatic polyester as a filler element raises the high temperature resistance of PTFE and is excellent for use with soft, dynamic mating surfaces.
Not recommended for sealing applications involving steam above 120 °C.

Colour additives
It is possible to pigment PTFE by using inorganic colour additives that withstand the sintering temperature of PTFE. Pigments do not significantly change the properties of PTFE. Combinations of pigments and other fillers are possible.

Proprietary fillers and filler combinations
Parker is continuously striving to search for and develop unique blends and formulations to enhance sealing performance in the most extreme applications.

Processing and machining of PTFE parts

Generally, PTFE is processed into semi-finished shapes with compression or iso-static moulding techniques. The PTFE resin in the form of a powder (pure or blended with fillers) is compressed into a preform mould at ambient temperature. After removal from the mold, the preformed rod or tube is heated in an oven and sintered. During this process it gains its cohesive strength for end use. For high-volume parts production, PTFE shapes are formed into continuous lengths by means of ram-extrusion. A hydraulic ram moves back and forth, pushing and compressing PTFE powder through an extrusion profile while it is being heated and sintered at the same time.
From the semi-finished rod or tube, the finished PTFE seals are produced by precision-machining.

Fig. 2.3 – PTFE powder, semi-finished shape and final machined product.

Polymer	Description	Application
UHMW-PE	Ultra-high molecular weight polyethylene	High wear resistance.
PEEK	Polyetheretherketone	High strength material for increased extrusion resistance
PCTFE	Polychlorotri-fluoroethylene	Very low gas permeability. Cryogenic environment.
PI	Polyimide	High temperature resistance.

Table 2.4 – Other typical polymeric materials and their application range.

Comparison with other polymer materials

Despite the fact that PTFE has outstanding sealing properties, some other polymeric materials may perform better in specific application conditions.
Below is a summary of the most common alternative polymeric materials, their application range and some basic properties.

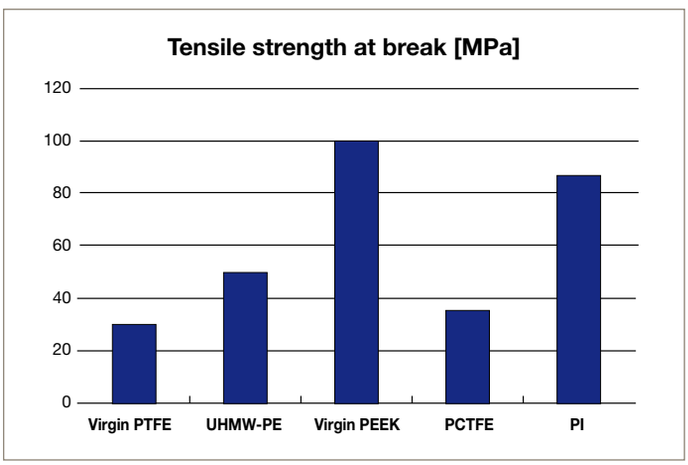

Fig. 2.5 – Comparison of tensile strength between PTFE and other polymeric materials.

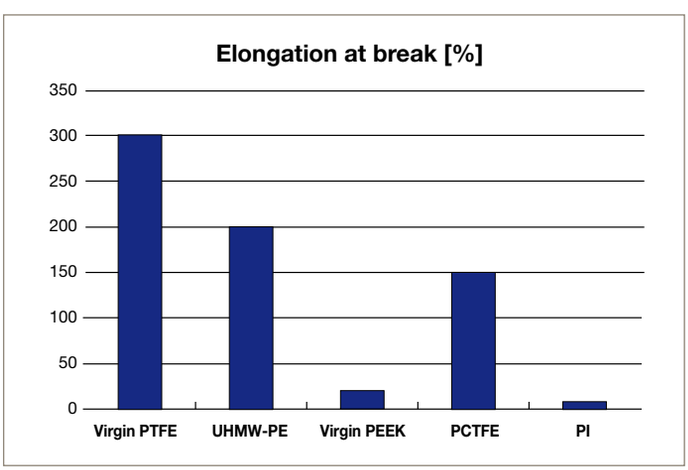

Fig. 2.6 – Comparison of elongation properties between PTFE and other polymeric materials.

2. When to use PTFE seals

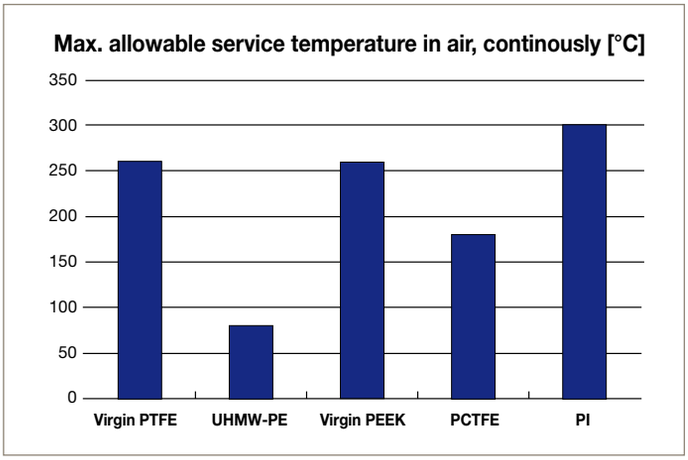

Fig. 2.7 – Comparison of max. allowable service temperature in air between PTFE and other polymeric materials.

3. PTFE product lines

Depending on the type of application, Parker offers various PTFE standard product groups

- FlexiSeals®
- Slipper seals
- Anti-extrusion rings
- Guiding tapes

The master decision tree guides you to the standard profil product group that should be the best fit for your application. Just start at the left, begin answering the basic application questions and follow the tree until a standard product group is selected. It is to be used as an engineering guideline only. In many cases several other parameters need to be considered to optimize the seal design.

Please contact Parker's consultancy service or your local sales force for confirmation of your choice or further recommendations.

Contents	Page
3.1 Master decision tree	12
3.2 FlexiSeals®	13
3.3 Slipper seals	14
3.4 Anti-extrusion rings	15
3.5 Guiding tapes	16
3.6 Other PTFE products	17

3. PTFE product lines

3.1 Master decision tree

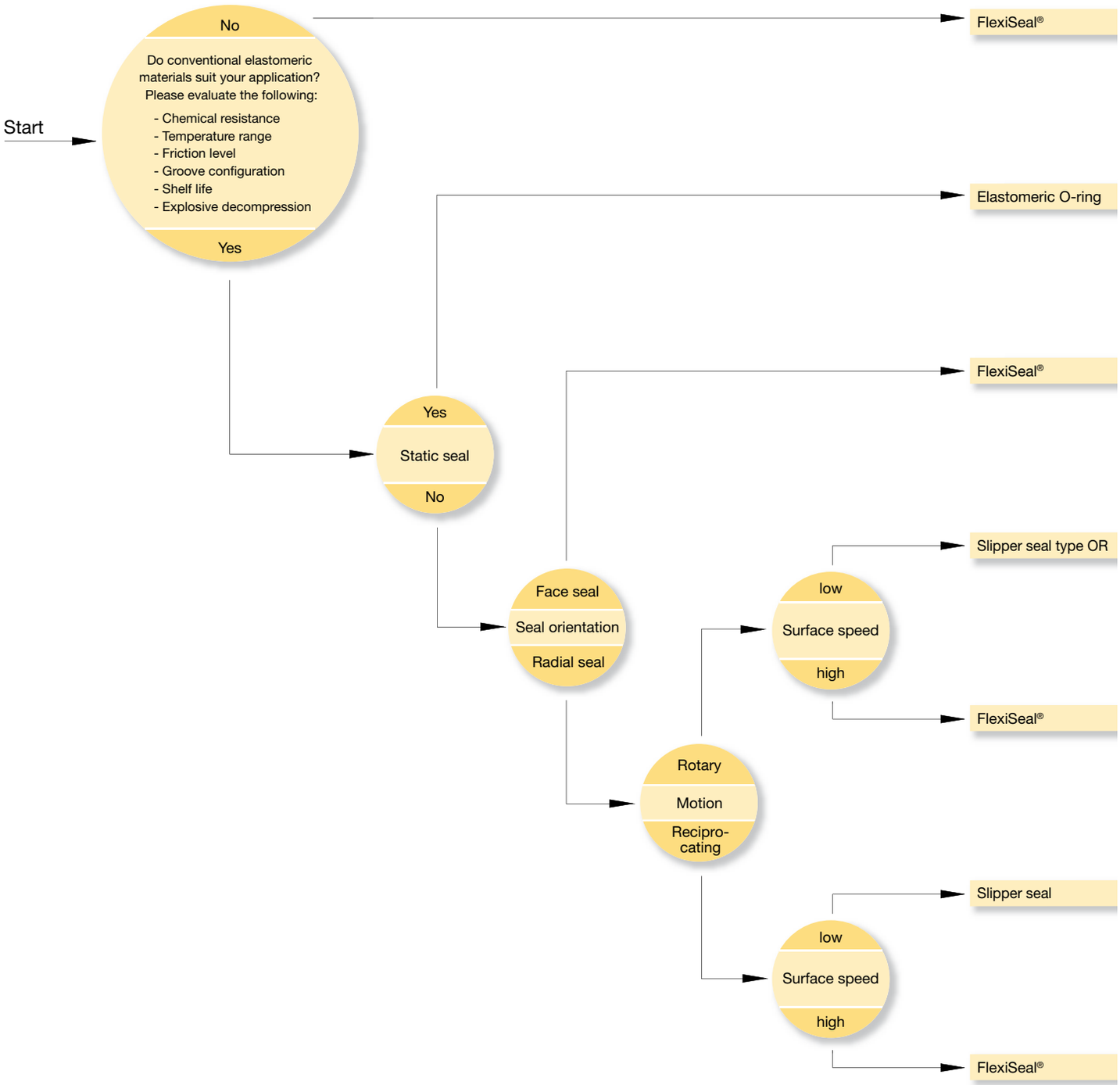

Fig. 3.1 – Master decision tree for Parker PTFE standard product lines.

3.2 FlexiSeals®

Fig. 3.2 – FlexiSeal®.

FlexiSeals® are used where conventional sealing materials (like elastomers, PUR, etc.) fail to meet the required temperature range, chemical resistance or friction requirements of the respective application.
The FlexiSeal® consists of a polymer jacket which is energized by a metallic spring.
FlexiSeals® are available in standard and custom sizes, in a wide variety of profiles, spring types and materials, in rod, piston and face seal configurations.
The use of a resilient spring element ensures positive sealing even at low-pressure and compensates for jacket wall reduction from cold flow, wear and thermal contraction.
The shape of the jacket allows the hydrostatic pressure to energize the seal and supplements the spring force which increases contact pressure and eliminates potential leakage.
Jacket profiles are made from PTFE-based and other high-performance polymer plastics.
Spring types are available in corrosion-resistant metal alloys including stainless steel, Elgiloy®, Inconel® and Hastelloy®.

NAA	NHA	FLO	FLS	JDO	NLA
		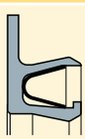	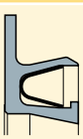	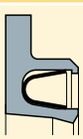	
NLI	**SLI**	**NLO**	**SLO**	**BAI**	**BHI**
BAO	**BHO**	**NAI**	**NHI**	**NAE**	**NHE**
		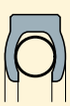	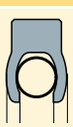	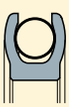	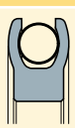
NLF	**NLG**	**NRI**	**HRI**	**NRE**	**HRE**
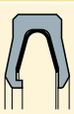	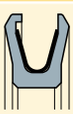			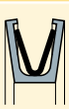	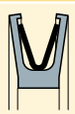

3.3 Slipper seals

Fig. 3.3 – Slipper seal.

Slipper seals are radial seals that consist of a polymer ring and an elastomeric energizing element. They are typically used in general industrial pneumatic/hydraulic environments where a dynamic sealing element is required. The polymer ring faces the dynamic side of the application while the elastomeric element provides positive sealing at low-pressure and compensates for polymer thickness reduction from wear and cold flow.
A wide variety of profiles is available for reciprocating as well as for rotary applications, both in rod and piston configuration.
The polymer components are typically made of PTFE-based compounds and other high-performance plastic materials. The elastomeric energizer is available in a wide range of materials such as NBR, HNBR, EPDM and FKM.

AD	AT	CR	OC	OD	ON
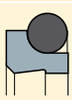	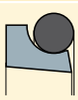	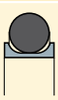	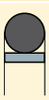	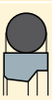	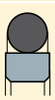

CP	OA	OG	OE	OR	OQ
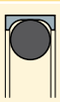		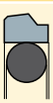	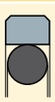		

3.4 Anti-extrusion rings

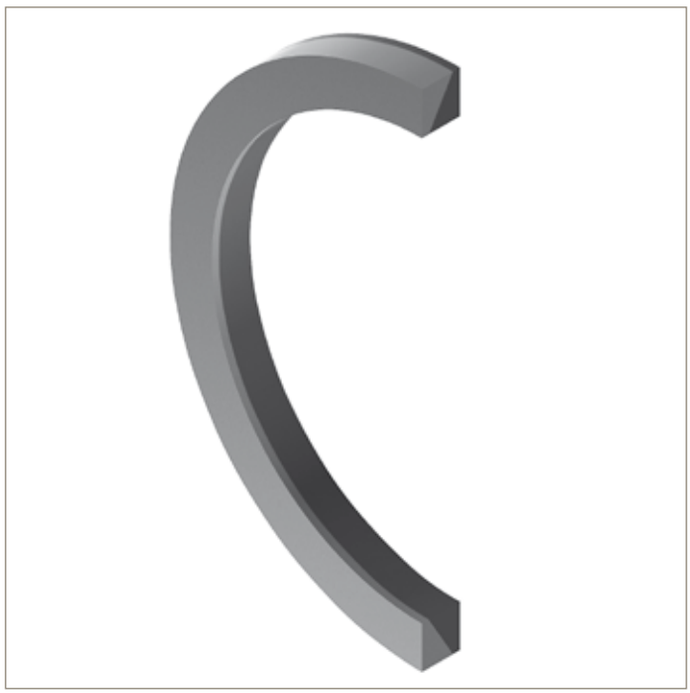

Fig. 3.4 - Anti-extrusion ring.

Anti-extrusion rings (or back-up rings) are non-sealing elements that prevent a softer sealing material to extrude in the downstream gap between adjacent hardware parts.
Anti-extrusion rings are typically made of polymeric materials such as filled PTFE, PEEK and reinforced PEEK that are resistant to high hydrostatic pressures.
They are machined with a tight groove fit and installed behind the seal, providing a smaller extrusion gap and allowing the seal to operate properly.
There are a variety of anti-extrusion rings available for use in various groove configurations and extrusion gap sizes together with elastomeric O-rings or FlexiSeals®.

IAA/IAI/IAO IBA/IBI/IBO	ICA/ICI/ICO IDA/IDI/IDO	XA/XB	XC

3.5 Guiding tapes

Fig. 3.5 – Guiding tape.

Guiding tapes prevent metallic contact between reciprocating pistons and cylinders when forces act perpendicular to the direction of movement.
Guiding tapes are typically made from heavily filled PTFE-compounds and are available in configurations suited for pneumatic and hydraulic applications.

F2	F3/FW/FT	FS

3.6 Other PTFE products

Fig. 3.6.1 – PTFE chevron stack.

3.6.1 PTFE chevron stacks

For applications that make special demands in terms of sealing action and reliability, Parker has developed a chevron packing set which incorporates its proven FlexiSeal® design technology and PTFE-based materials as well as other high-performance polymer plastics.

A typical PTFE chevron stack consists of a radial FlexiSeal®, followed by several V-rings and an anti-extrusion ring.

The FlexiSeal® is the main sealing element. A pressurised FlexiSeal® automatically energises a series of V-shaped segments stacked behind it, pushing the lips outwards. The multiple sealing areas which are generated this way reduce the risk of leakage.
Each V-ring responds to pressure shocks and even minor pressure changes by providing an immediate sealing effect.

The anti-extrusion ring prevents the softer PTFE elements from being extruded into the downstream hardware gap.

Advantages compared to conventional elastomer-based chevron stacks:
- Benefits of PTFE over elastomer materials.
- No special tooling required.
- Quick design and short manufacturing times.
- Simplified hardware and groove assembly as there is no need for a mechanical loading mechanism.

The chevron stack sealing elements are made from pressure- and wear-resistant PTFE compounds. The anti-extrusion ring is typically made from PEEK.

To satisfy the sealing needs of the Energy, Oil and Gas market, Parker offers a range of NORSOK and NACE approved materials. A dedicated list is available upon request.

Application range
- Valve stems
- High-speed reciprocating equipment
- Forging presses
- Injection moulding machines
- Steel hydraulics
- Marine hydraulics

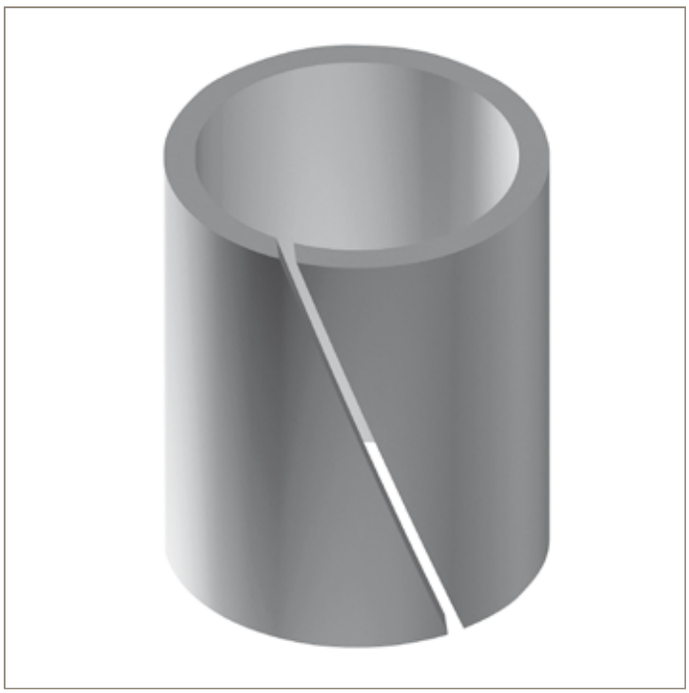

Fig. 3.6.2 – PTFE bearing.

3.6.2 PTFE bearings

Bearing arrangements made of PTFE offer many advantages over conventional metallic bearings such as

- Chemical resistance
- Thermal resistance
- Self-lubrication/low friction
- Reduced mass
- Non-magnetic
- Anti-static
- Reduced noise level

In addition to a wide range of filled PTFE compounds, Parker bearings are available in other high-performance polymeric materials such as PA, PEEK, PAI and PI.

Fig. 3.6.3 – PTFE bellow.

3.6.3 PTFE bellows

Bellows are expansion joints consisting of a series of convolutions that allow flexibility in the axial, radial and angular direction. They are typically used in piping systems to absorb thermally induced motion and vibrations.
Bellows made from PTFE are suitable for applications involving high temperatures and/or chemically aggressive media.

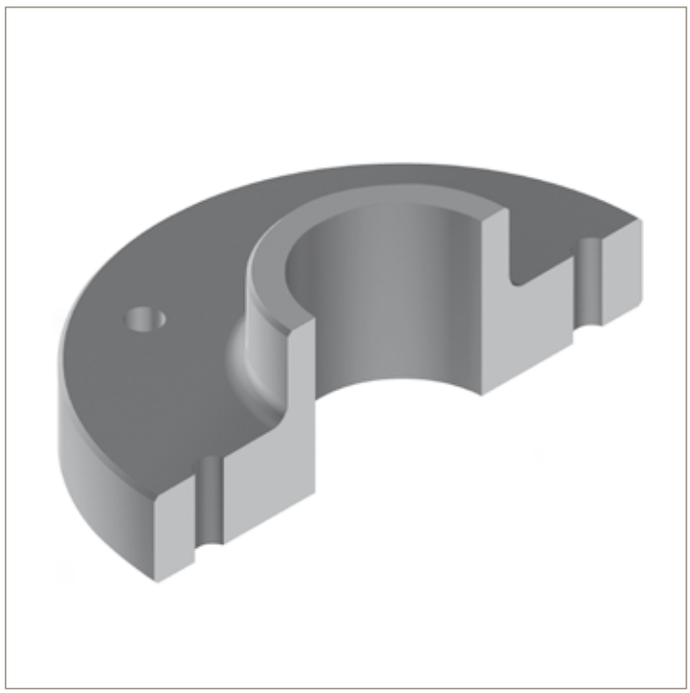

Fig. 3.6.4 – Custom shape.

3.6.4 Custom shapes

Parkers uses state-of-the-art machining facilities to manufacture custom sealing solutions or non-sealing parts according to customers' specifications and will also provide design assistance if desired.
In addition to seals, machined parts include valve seats, washers, threaded parts and other precision-machined items.

For additional information on these PTFE products, please contact our consultancy service.

Contents			Page
4.1	**What is a FlexiSeal® and how does it work**		**22**
4.2	**FlexiSeal® standard part number nomenclature**		**23**
4.3	**How to select the FlexiSeal® type for your application**		**24**
4.3.1	Static and intermittent		25
4.3.2	Dynamic rotating applications		26
4.3.3	Dynamic reciprocating applications		27
4.3.4	Selecting the FlexiSeal® size for your application		29
	4.3.4.1	Radial seals	30
		NAA	30
		NHA	32
		FLO	34
		FLS	36
		JDO	38
		NLI	40
		SLI	42
		NLO	44
		SLO	46
		NLA	48
		BAI	50
		BHI	52
		BAO	54
		BHO	56
	4.3.4.2	Face seals	58
		NAI	58
		NHI	60
		NAE	62
		NHE	64
		NLF	66
		NLG	68
		NRI	70
		HRI	72
		NRE	74
		HRE	76
4.4	**Non-standard FlexiSeal® styles**		**78**
4.4.1	Radial seals for rotary, reciprocating and static sealing		78
	4.4.1.1	Asymmetrical lip length	78
	4.4.1.2	Asymmetrical lip thickness	78
	4.4.1.3	Partially captured spring	78
4.4.2	Radial wiper and wiper seals		79
4.4.3	Flanged radial seals for high-speed rotary sealing and cryogenic applications		79
4.4.4	Radial rotary seals to fit into standard lip seal grooves		80
4.4.5	Double cavity seals to suit large groove sections		80
4.4.6	Trapped anti-blowout seals		81

Contents			Page
4.4.7	Conical seals		81
4.4.8	Closed seals for sanitary/food applications		82
4.4.9	Double-acting seals		82
4.4.10	Seals with canted coil spring		83
4.4.11	Shaped seals		83
4.4.12	FlexiSeals® for standard O-ring grooves		83
4.5	**FlexiSeal® material selection**		**84**
4.5.1	Jacket material		84
4.5.2	Energizer material		85
4.6	**Technical information**		**88**
4.6.1	Groove design and installation		88
	4.6.1.1	Two-piece grooves or open groove configuration	88
		4.6.1.1.1 Heel-first installation	88
		4.6.1.1.2 Lips-first installation	88
	4.6.1.2	Step-cut grooves or partially closed-groove configuration	89
		4.6.1.2.1 Step-cut groove in rod mode	89
		4.6.1.2.2 Step-cut groove in piston mode	89
	4.6.1.3	Closed groove configuration	90
		4.6.1.3.1 Piston seal instal lation in closed-groove	90
		4.6.1.3.2 Rod seal installation in closed-groove	92
	4.6.1.4	Alternative grooves with snap ring retainer	92
4.6.2	Hardware surface finish and hardness		93
	4.6.2.1	Mating surface finish recommendations	93
	4.6.2.2	Mating surface hardness recommendations	94
4.6.3	Friction information		94
4.6.4	Pressure capability – battling extrusion gaps		96
4.6.5	Shaft eccentricity and runout		98
4.6.6	Pressure-velocity guidelines for rotary FlexiSeals®		99
4.6.7	Spring design		100
	4.6.7.1	Helical spring	100
	4.6.7.2	Cantilever spring	101
	4.6.7.3	Heavy duty cantilever spring	102
	4.6.7.4	Canted coil spring	102
4.6.8	Lip design		103
	4.6.8.1	Chamfered lip	103
	4.6.8.2	Wiper lip	103
	4.6.8.3	Beaded lip	104

4. FlexiSeal®

4.1 What is a FlexiSeal® and how does it work

The FlexiSeal® consists of a polymeric jacket which is energized by a metallic spring when installed into a groove. It offers many of the well known advantages of the common elastomeric O-ring while avoiding many of its limitations.

The resilient spring element responds with constant force, pushing out the sealing lips, creating a tight seal against the groove mating surfaces. The open end of the jacket is orientated towards the highest pressure side and allows the hydrostatic pressure to energize the seal and supplement the spring force which increases contact pressure and eliminates potential leakage.

The use of a resilient spring element ensures positive sealing even at low-pressure and compensates for jacket wall reduction from cold flow, wear and thermal contraction.
In conditions that see thermal cycling, the spring system continues to energize the seal lips without taking a compression set or becoming too soft or hard.

Many different spring designs are available in corrosion-resistant metal alloys including stainless steel, cobalt-chromium-nickel alloy, Inconel® and Hastelloy®.

Jacket profiles are typically made from PTFE-based and other high-performance polymer plastics, often with special additives to enhance, for example, wear resistance or high-temperature strength. PTFE offers excellent inherent low friction characteristics and an outstanding high degree of chemical inertness. Additionally, polymers are less prone to some of the problems associated with elastomeric seals including explosive decompression and stick-slip.

FlexiSeals® are precision lathe-turned parts. Although Parker offers selected sizes to fit many popular international O-ring cavities, the fact is that the FlexiSeal® system can be tailored to any existing customer groove geometry.

Fig. 4.1 – FlexiSeals®

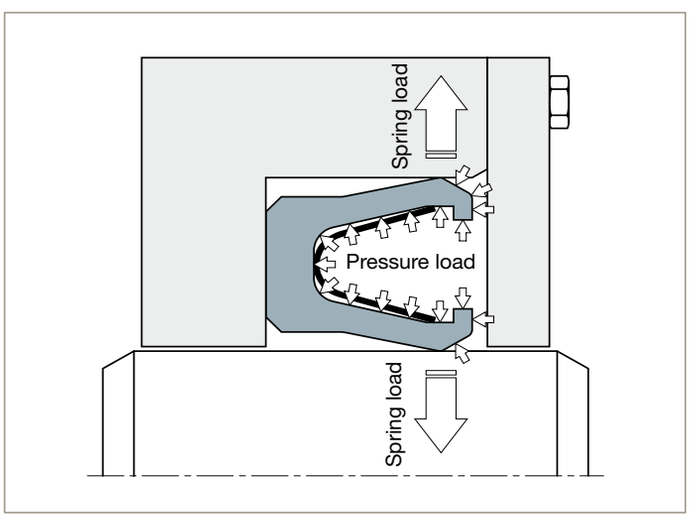

Fig. 4.2 – FlexiSeal® operating principle

4.2 FlexiSeal® standard part number nomenclature

The FlexiSeal® product line is available in a large variety of types, a virtually unlimited number of sizes and numerous jacket materials and energizers.
The FlexiSeal® standard range is defined by a standard part number which includes all key design elements

XXX M000000 00 000 0

- **Energizer material** (see section 4.5.2)
- **Jacket material** (see section 4.5.1)
- **Cross-section code** (see section 4.3.4)
- **Groove diameter in millimetres specified to 2 decimal places** (see section 4.3.4)
- **M for metric**
- **FlexiSeal® type** (see section 4.3.1 to 4.3.3)

Ordering example

NAA M010000 04 001 1

NAA	FlexiSeal® type (radial type NAA)
M	Metric
010000	Groove inner diameter (100 mm)
04	Cross-section code
001	Jacket material code (virgin PTFE)
1	Energizer material code (17/7 PH stainless steel)

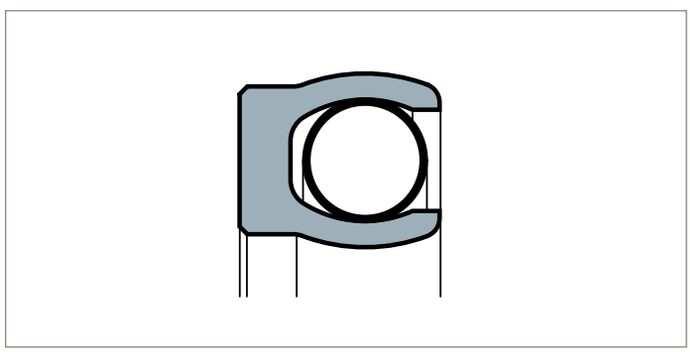

4.3 How to select the FlexiSeal® type for your application

The following decision trees are designed to provide a clear path to the appropriate FlexiSeal® type choice for your application. The applications are divided into three basic categories.

The first category deals with static and intermittently dynamic applications both in radial and facial configurations.
The second one covers radial seals that experience regular dynamic rotary motion.
A third category deals with radial seals that see regular dynamic reciprocating motion.

The decision trees are to be used as an engineering guideline only. In many cases several other parameters have to be considered to optimize the seal design.
Please contact Parker's consultancy service or your local sales force for confirmation of your choice or further recommendations.

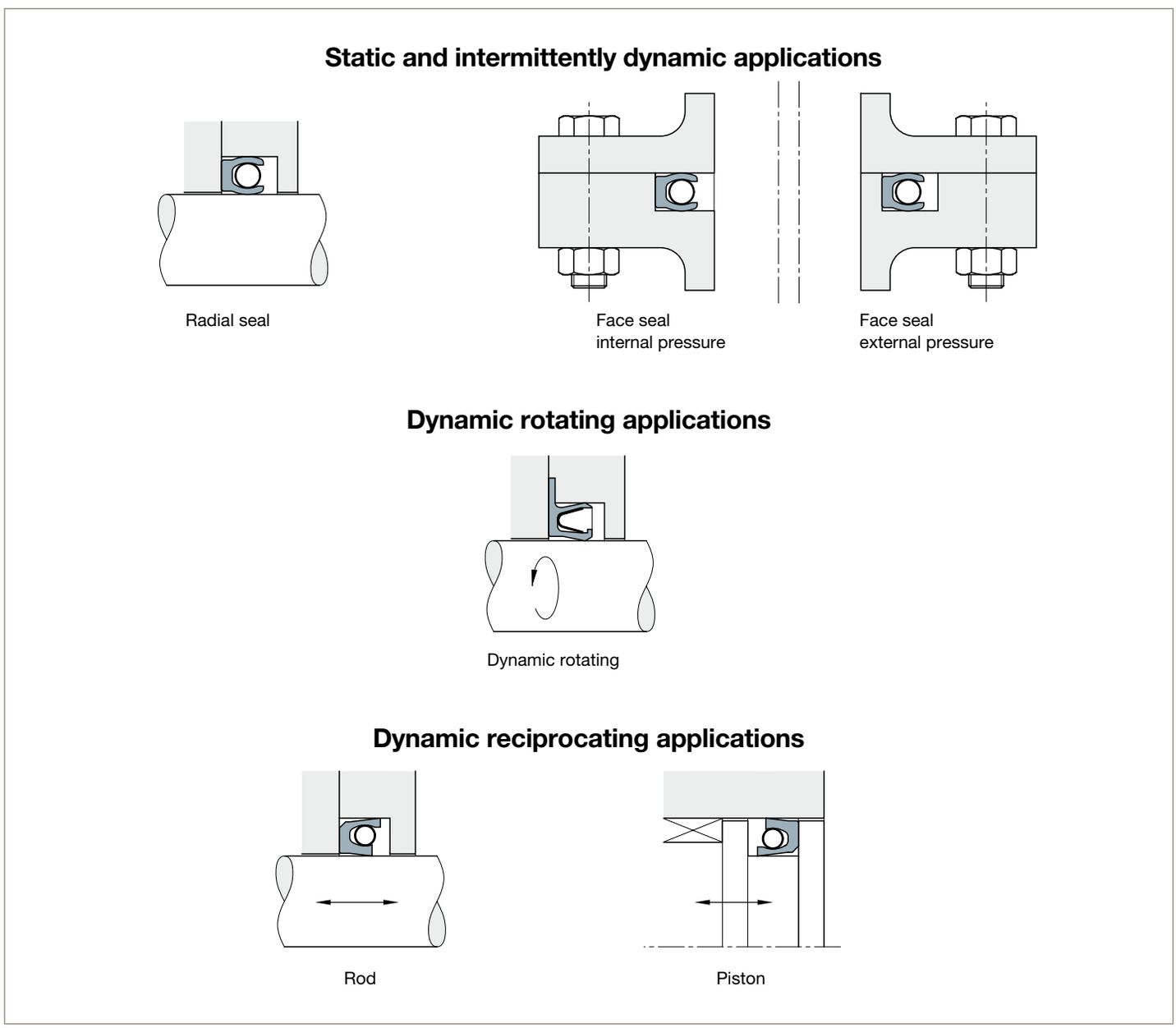

Fig. 4.3 – FlexiSeal® basic application categories.

4.3.1 Static and intermittently dynamic applications

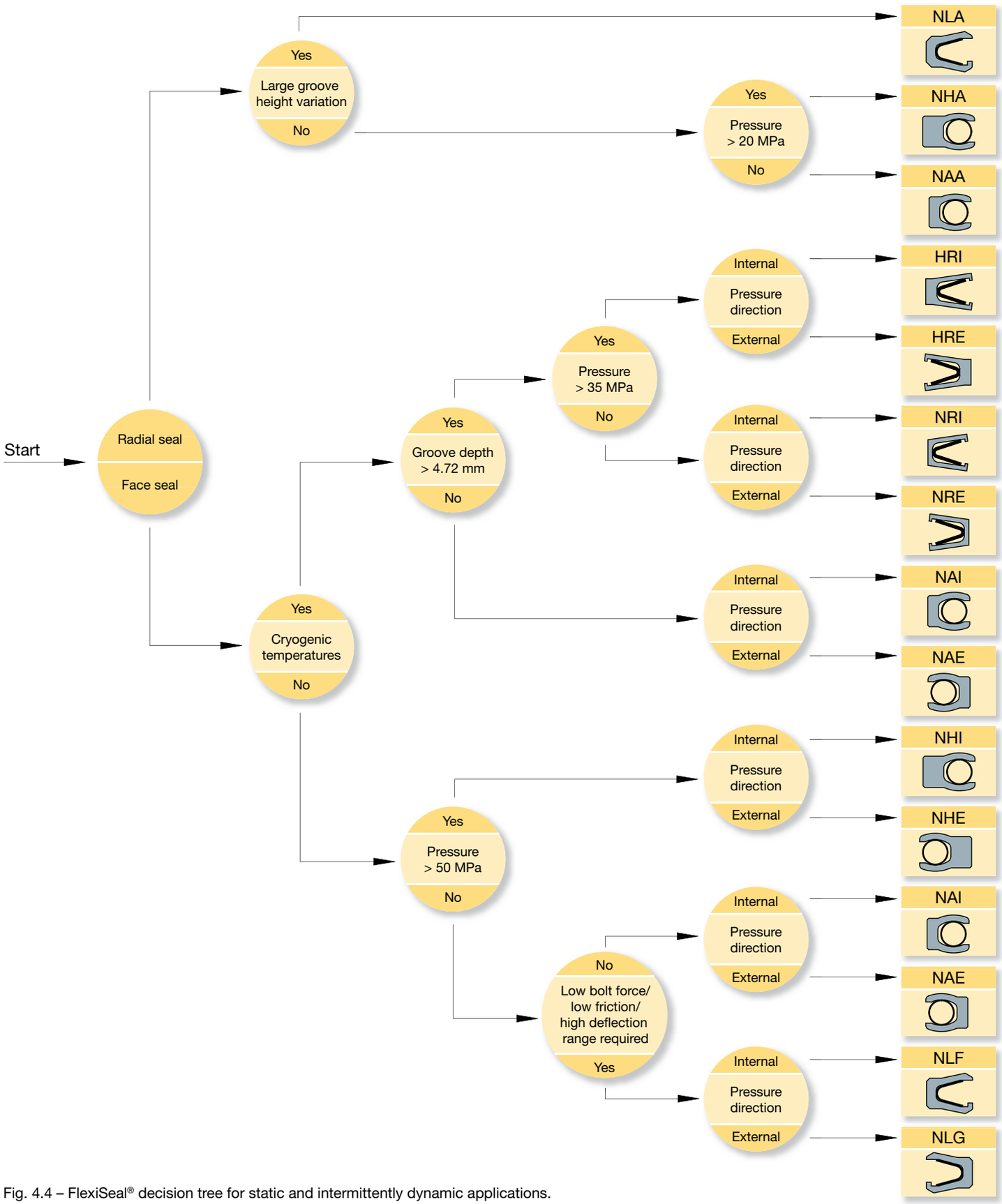

Fig. 4.4 – FlexiSeal® decision tree for static and intermittently dynamic applications.

4.3.2 Dynamic rotating applications

When practical, a groove which accepts a flanged seal is preferred as this prevents seal rotation and resists thermally induced movement.

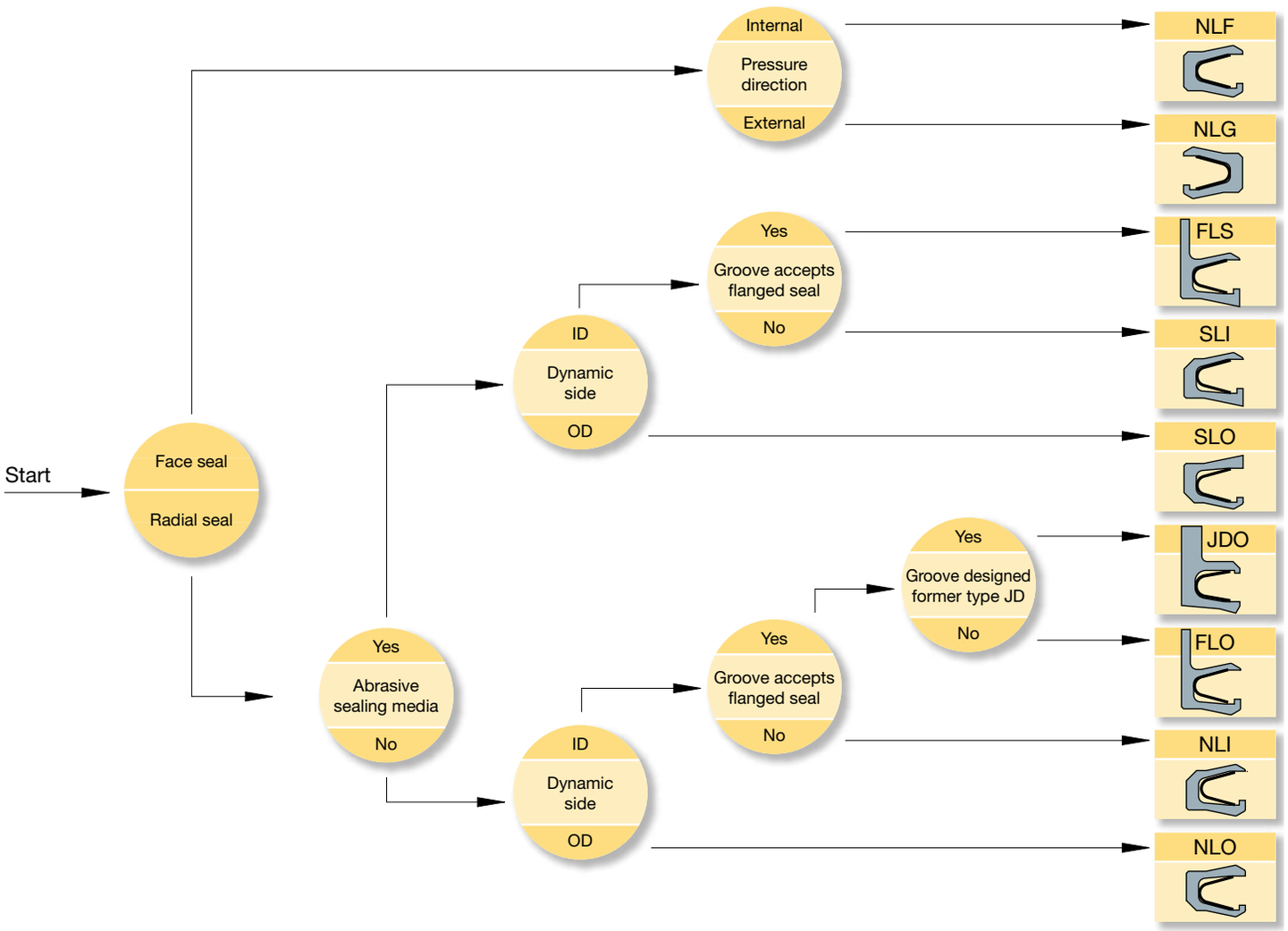

Note
The seal selection guidelines assume moderate temperatures and rotational velocities. Refer to the pressure-velocity-temperature guidelines in chapter 4.6.6 of the Technical Information section to pre-qualify the seal for rotating applications.

Fig. 4.5 – FlexiSeal® decision tree for dynamic rotating applications.

4.3.3 Dynamic reciprocating applications

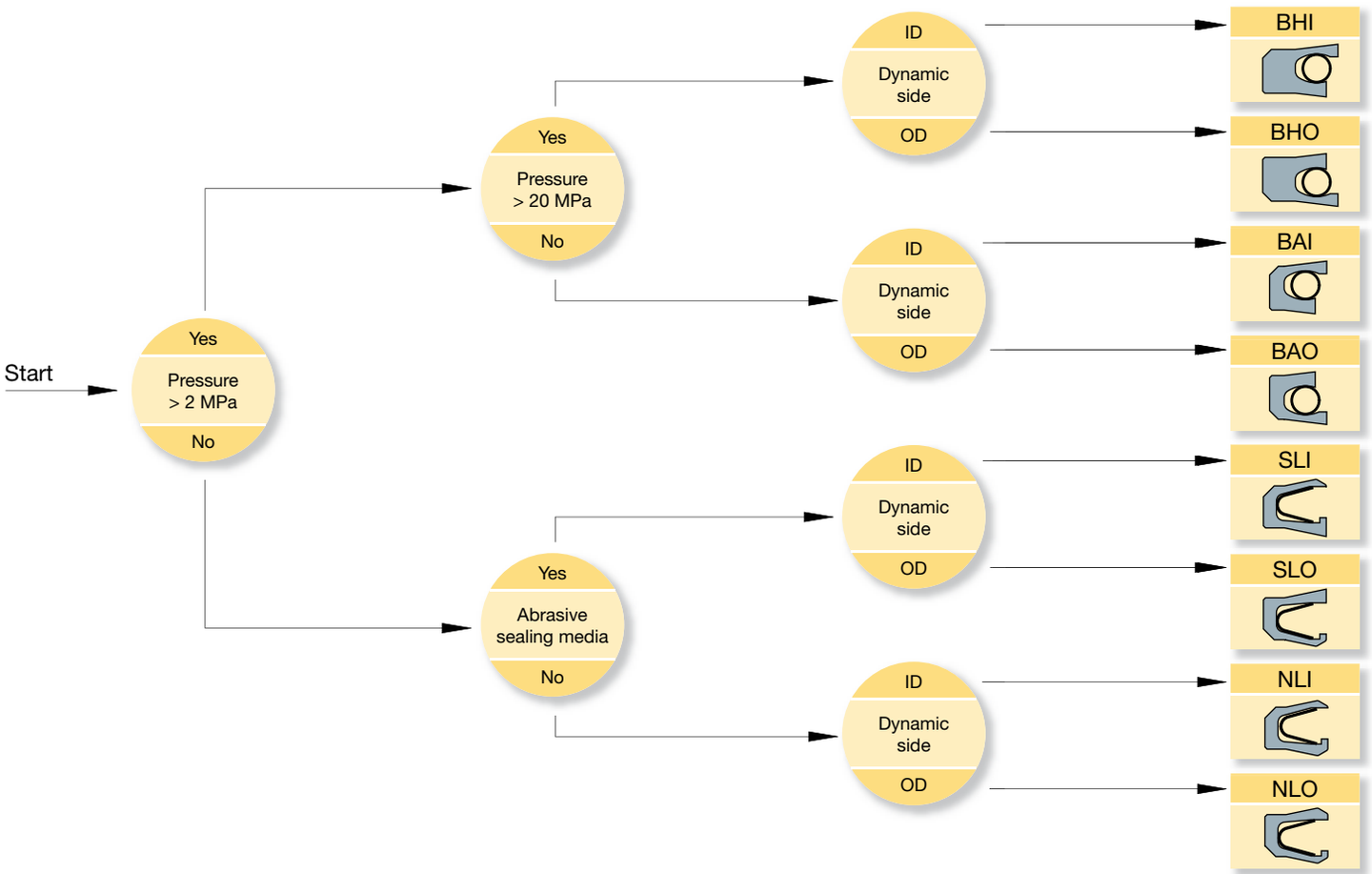

Fig. 4.6 – FlexiSeal® decision tree for dynamic reciprocating applications.

4. FlexiSeal®

4.3.4 Selecting the FlexiSeal® size for your application

Standard FlexiSeals® are available in any diameter from 2.5 mm up to 3000 mm and a variety of cross-sections to fit the various groove sizes you may have. Refer to the page of the FlexiSeal® type selected for your application to determine the appropriate diameter, cross-section and housing dimensions.
Each selection outside this standard size range will result in a non-standard part generation and requires a filled out copy of the 'Application data sheet' included in chapter 8 of this design manual. Please forward a completed form to our consultancy service or to your local sales force and we will come back to you with detailed recommendations.

Radial seals		Page
NAA	Static, intermittently dynamic	30
NHA	Static, intermittently dynamic – high-pressure	32
FLO	Inside dynamic – rotary – flanged	34
FLS	Inside dynamic – wiper – rotary – flanged	36
JDO	Inside dynamic – rotary – flanged	38
NLI	Inside dynamic	40
SLI	Inside dynamic – wiper	42
NLO	Outside dynamic	44
SLO	Outside dynamic – wiper	46
NLA	Static, inside and outside dynamic	48
BAI	Inside dynamic – reciprocating	50
BHI	Inside dynamic – reciprocating – high-pressure	52
BAO	Outside dynamic – reciprocating	54
BHO	Outside dynamic – reciprocating – high-pressure	56

Face seals		Page
NAI	Internal pressure – static, intermittently dynamic	58
NHI	Internal high-pressure – static, intermittently dynamic	60
NAE	External pressure – static, intermittently dynamic	62
NHE	External high-pressure – static, intermittently dynamic	64
NLF	Internal pressure – static, dynamic – low load	66
NLG	External pressure – static, dynamic – low load	68
NRI	Internal pressure – high load/deflection – cryogenic	70
HRI	Internal high-pressure – high load/deflection – cryogenic	72
NRE	External pressure – high load/deflection – cryogenic	74
HRE	External high-pressure – high load/deflection – cryogenic	76

.

The profile NAA is excellent for both static and intermittently dynamic applications. The seal can be used for reciprocating or rotating movements on either inner or outer diameter.

Profile NAA is particularly suitable for valve stems, secondary sealing in mechanical seals, connectors, pistons and swivel joints.

Features

- Helical wound spring for high load and small deflection range.
- Rounded lip profile for easy installation and improved lubrication of a reciprocating sealing surface.
- Best choice for installation into non-split grooves: the short heel and helical spring stretch easily and the rounded lips will not hang up.
- Widest range of cross-sections and diameters available, including sizes for upgrading standard O-ring grooves.
- Many high-resilience energizer options available, including choice of light, medium and heavy loads and NACE for oil field use.
- Low-cost elastomeric energizers available, all with excellent fatigue resistance.

Range of Application

For static and intermittently dynamic sealing.

Operating pressure	≤ 20 MPa
Operating temperature	-260 to +315 °C
Surface speed	≤ 0.005 m/s

Compounds

The NAA seal is available in a wide range of polymers. These include unfilled PTFE, filled PTFE, UHMW-PE, PEEK and many others. See the compound list for further information.

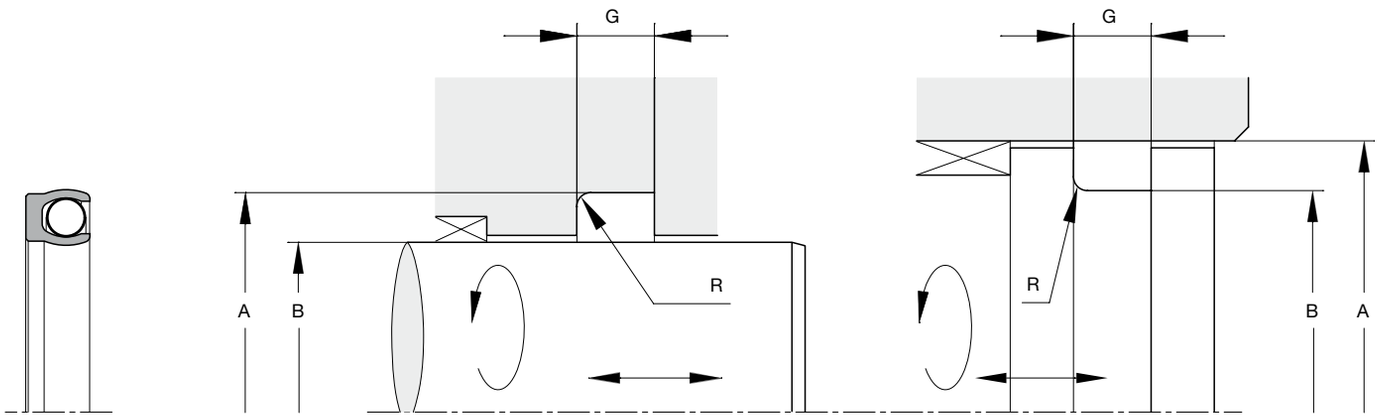

Housing dimensions

Nominal Cross-section	Cross-section code	Recommended inner Ø range Tolerance h8 B (mm) ≥	≤	Outer Ø Tolerance H8 A (mm)	Groove width min. G (mm)	Radius max. R (mm)
1/16"	01	7.5	75	B + 2.84	2.4	0.30
3/32"	02	5.5	180	B + 4.52	3.6	0.50
1/8"	03	6.0	250	B + 6.15	4.8	0.50
3/16"	04	12.5	300	B + 9.45	7.1	0.75
1/4"	05	50.0	500	B + 12.12	9.5	0.75
3/8"	06	150.0	1400	B + 18.75	13.3	0.75
1/2"	07	300.0	3000	B + 25.40	18.0	0.75

Ordering example

Shaft 70 mm
Cylinder bore 76.15 mm

NAA M007000 03 XXX Y

NAA	profile
M007000	inner groove diameter in mm times 100
03	cross-section code corresponding to a 6.15 mm groove diameter difference
XXX	jacket material
Y	spring-energizer material

The profile NHA is excellent for both static and intermittently dynamic applications at high presssures. The seal can be used for reciprocating or rotating movements on either inner or outer diameter.

Profile NHA is particularly suitable for high-pressure valve stems, connectors, pistons and swivel joints.

Features

- Extended heel that reduces effects of extrusion.
- Helical wound spring for high load and small deflection range.
- Rounded lip profile for easy installation and improved lubrication of a reciprocating sealing surface.
- Good choice for installation into non-split grooves: the short heel and helical spring stretch easily and the rounded lips will not hang-up.
- Widest range of cross-sections and diameters available, including sizes for upgrading standard O-ring grooves.
- Many high-resilience energizer options available, including choice of light, medium and heavy loads and NACE for oil field use.
- Low-cost elastomeric energizers available, all with excellent fatigue resistance.

Range of Application

For high-pressure, static and intermittently dynamic sealing.

Operating pressure	≤ 55 MPa
Operating temperature	-260 to +315 °C
Surface speed	≤ 0.005 m/s

Compounds

The NHA seal is available in a wide range of polymers. These include unfilled PTFE, filled PTFE, UHMW-PE, PEEK and many others. See the compound list for further information.

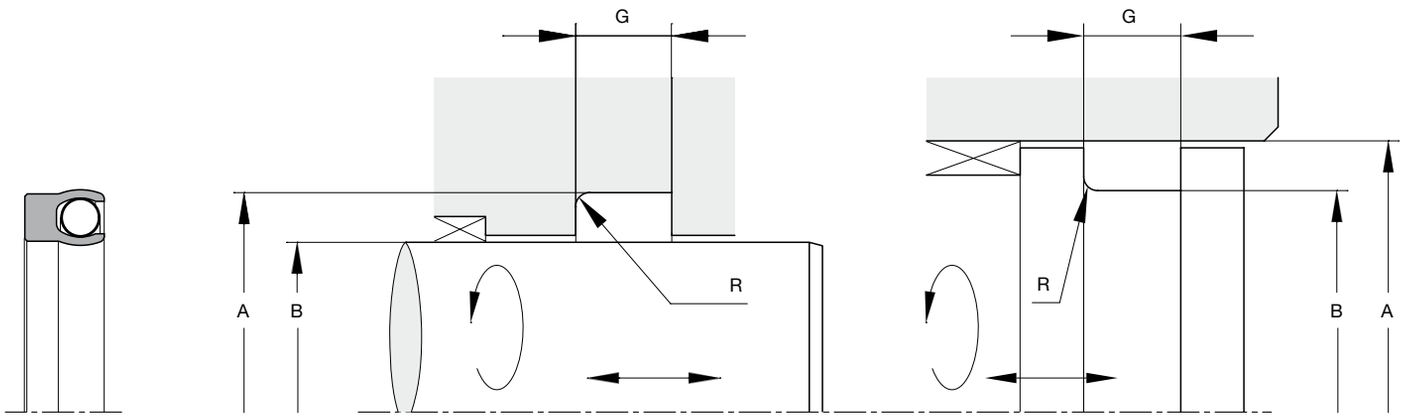

Housing dimensions

Nominal Cross-section	Cross-section code	Recommended inner Ø range Tolerance h8 B (mm) ≥	≤	Outer Ø Tolerance H8 A (mm)	Groove width min. G (mm)	Radius max. R (mm)
1/16"	01	7.5	75	B + 2.84	3.8	0.30
3/32"	02	5.5	180	B + 4.52	4.6	0.50
1/8"	03	6.0	250	B + 6.15	6.0	0.50
3/16"	04	12.5	300	B + 9.45	8.5	0.75
1/4"	05	50.0	500	B + 12.12	12.1	0.75
3/8"	06	150.0	1400	B + 18.75	15.8	0.75
1/2"	07	300.0	3000	B + 25.40	20.5	0.75

Ordering example

Shaft 70 mm
Cylinder bore 76.15 mm

NHA M007000 03 XXX Y

NHA	profile
M007000	inner groove diameter in mm times 100
03	cross-section code corresponding to a 6.15 mm groove diameter difference
XXX	jacket material
Y	spring-energizer material

The profile FLO is the best choice for sealing rotating shafts such as in pumps, motors and rotary actuators.

Features

- Outside flange that stabilizes the seal, prevents seal rotation and resists thermally induced movement.
- Heavy dynamic lip (inside) ensures longest life.
- Cantilever spring for low load-high compliance behaviour.
- Many high-resilience energizer options available, including choice of light, medium and heavy loads and NACE for oil field use.
- Available with silicone filling for food and drug applications.

Range of Application

For rotating shaft sealing.

Operating pressure	≤ 20 MPa
Operating temperature	-260 to +315 °C
Surface speed	≤ 10 m/s

Subject to pv guidelines (chapter 4.6.6)

Compounds

The FLO seal is available in a wide range of polymers. These include unfilled PTFE, filled PTFE and many others. See the compound list for further information.

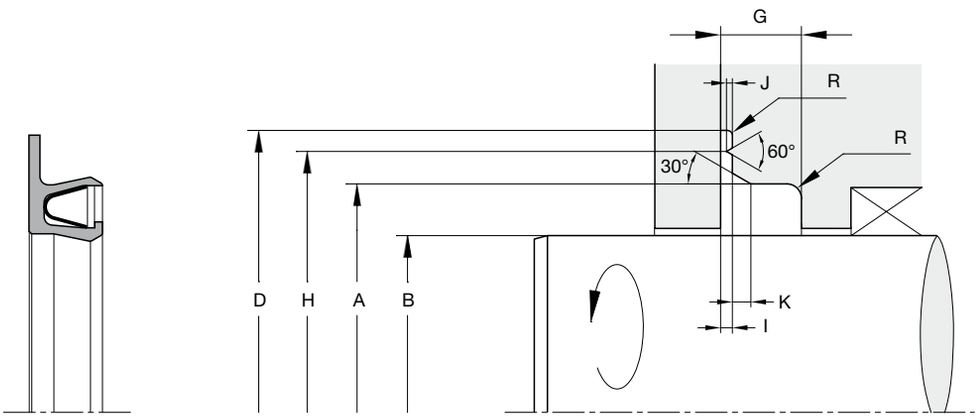

Housing dimensions

Nominal cross-section	Cross-section code	Recommended inner Ø range Tolerance h10 B (mm) ≥	≤	Outer Ø Tol. H8 A (mm)	Groove width min. G (mm)	Radius max. R (mm)	Flange outer Ø Tol. H11 D (mm)	Nose Ø Tol. H11 H (mm)	Flange width I (mm)	Nose width J (mm)	Chamfer width K (mm)
1/16"	01	3.0	75	B + 2.84	2.4	0.30	B + 7.0	B + 5.0	0.56 $^{+0.08}$	0.25 $^{+0.10}$	0.4 - 0.5
3/32"	02	5.0	180	B + 4.52	3.6	0.50	B + 9.0	B + 7.0	0.56 $^{+0.08}$	0.25 $^{+0.10}$	0.8 - 1.0
1/8"	03	12.5	250	B + 6.15	4.8	0.50	B + 12.5	B + 10.0	0.66 $^{+0.08}$	0.30 $^{+0.10}$	1.0 - 1.2
3/16"	04	22.0	300	B + 9.45	7.1	0.75	B + 17.5	B + 13.5	0.96 $^{+0.08}$	0.41 $^{+0.10}$	1.3 - 1.6
1/4"	05	50.0	685	B + 12.12	9.5	0.75	B + 22.0	B + 17.0	1.16 $^{+0.08}$	0.56 $^{+0.10}$	1.7 - 2.0

Ordering example

Shaft 70 mm
Cylinder bore 76.15 mm

FLO M007000 03 XXX Y

FLO	profile
M007000	inner groove diameter in mm times 100
03	cross-section code corresponding to a 6.15 mm groove diameter difference
XXX	jacket material
Y	spring-energizer material

The profile FLS is the best choice for sealing rotating shafts with abrasive media such as in pumps, motors and rotary actuators.

Features

- Wiper-type dynamic (inside) lip.
- Outside flange that stabilizes the seal, prevents seal rotation and resists thermally induced movement.
- Heavy dynamic lip ensures longest life.
- Cantilever spring for low load-high compliance behaviour.
- Many high-resilience energizer options available, including choice of light, medium and heavy loads and NACE for oil field use.
- Available with silicone filling for food and drug applications.

Range of Application

For rotating shaft sealing in abrasive media.

Operating pressure	≤ 20 MPa
Operating temperature	-260 to +315 °C
Surface speed	≤ 10 m/s

Subject to pv guidelines (chapter 4.6.6)

Compounds

The FLS seal is available in a wide range of polymers. These include unfilled PTFE, filled PTFE and many others. See the compound list for further information.

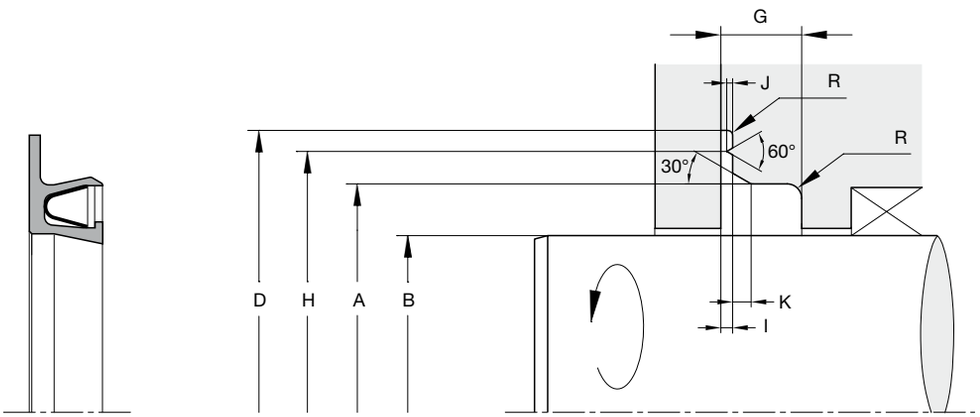

Housing dimensions

Nominal cross-section	Cross-section code	Recommended inner Ø range Tolerance h10 B (mm) ≥	≤	Outer Ø Tol. H8 A (mm)	Groove width min. G (mm)	Radius max. R (mm)	Flange outer Ø Tol. H11 D (mm)	Nose Ø Tol. H11 H (mm)	Flange width I (mm)	Nose width J (mm)	Chamfer width K (mm)
1/16"	01	3.0	75	B + 2.84	2.4	0.30	B + 7.0	B + 5.0	0.56 $^{+0.08}$	0.25 $^{+0.10}$	0.4 - 0.5
3/32"	02	5.0	180	B + 4.52	3.6	0.50	B + 9.0	B + 7.0	0.56 $^{+0.08}$	0.25 $^{+0.10}$	0.8 - 1.0
1/8"	03	12.5	250	B + 6.15	4.8	0.50	B + 12.5	B + 10.0	0.66 $^{+0.08}$	0.30 $^{+0.10}$	1.0 - 1.2
3/16"	04	22.0	300	B + 9.45	7.1	0.75	B + 17.5	B + 13.5	0.96 $^{+0.08}$	0.41 $^{+0.10}$	1.3 - 1.6
1/4"	05	50.0	685	B + 12.12	9.5	0.75	B + 22.0	B + 17.0	1.16 $^{+0.08}$	0.56 $^{+0.10}$	1.7 - 2.0

Ordering example

Shaft 70 mm
Cylinder bore 76.15 mm

FLS M007000 03 XXX Y

FLS	profile
M007000	inner groove diameter in mm times 100
03	cross-section code corresponding to a 6.15 mm groove diameter difference
XXX	jacket material
Y	spring-energizer material

The profile JDO is identical to the former profile JD and is the best choice for sealing rotating shafts as in pumps, motors and rotary actuators.

Features

- Outside flange that stabilizes the seal and prevents seal rotation.
- Heavy dynamic lip (inside) ensures longest life.
- Cantilever spring for low load-high compliance behaviour.
- Many high-resilience energizer options available, including choice of light, medium and heavy loads and NACE for oil field use.
- Available with silicone filling for food and drug applications.

Range of Application

For rotating shaft sealing.

Operating pressure	≤ 20 MPa
Operating temperature	-260 to +315 °C
Surface speed	≤ 10 m/s

Subject to pv guidelines (chapter 4.6.6)

Compounds

The JDO seal is available in a wide range of polymers. These include unfilled PTFE, filled PTFE and many others. See the compound list for further information.

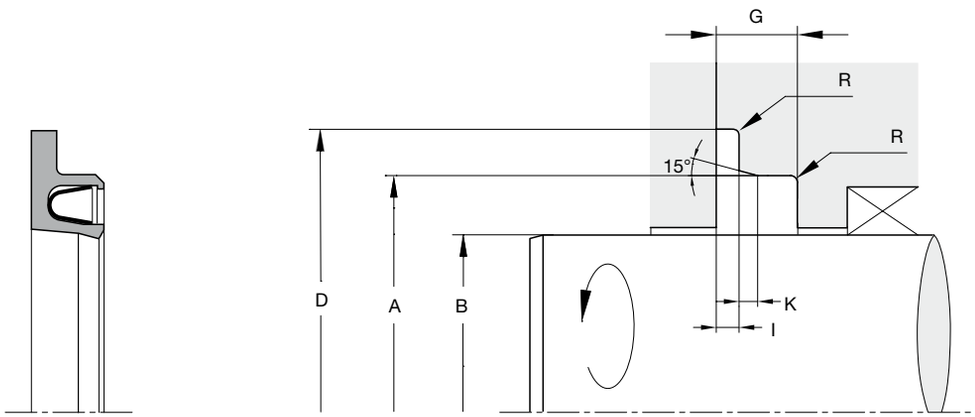

Housing dimensions

Nominal cross-section	Cross-section code	Recommended inner Ø range Tolerance f7 B (mm) ≥	≤	Outer Ø Tolerance H9 A (mm)	Groove width min. G (mm)	Radius max. R (mm)	Flange outer Ø Tolerance H11 D (mm)	Flange width I (mm)	Chamfer width K (mm)
3/32"	02	8	180	B + 5.0	3.6	0.3	B + 9.0	$0.85^{-0.10}$	0.8
1/8"	03	20	250	B + 7.0	4.8	0.4	B + 12.5	$1.35^{-0.15}$	1.1
3/16"	04	40	400	B + 10.5	7.1	0.5	B + 17.5	$1.80^{-0.20}$	1.4
1/4"	05	50	700	B + 14.0	9.5	0.5	B + 22.0	$2.80^{-0.20}$	1.6

Ordering example

Shaft 70 mm
Cylinder bore 77 mm

JDO M007000 03 XXX Y

JDO	profile
M007000	inner groove diameter in mm times 100
03	cross-section code corresponding to a 7 mm groove diameter difference
XXX	jacket material
Y	spring-energizer material

The profile NLI is ideal for sealing rotating shafts without the possibility of a flange cavity in the groove. It can also be used in low-pressure reciprocating applications.

Profile NLI is particularly suitable for pumps, motors, rotary actuators and reciprocating stems.

Features

- Heavy dynamic lip (inside) ensures longest life.
- Cantilever spring for low load-high compliance behaviour.
- Many high-resilience energizer options available, including choice of light, medium and heavy loads and NACE for oil field use.
- Available with silicone filling for food and drug applications.
- Allows the integration of a stand-off ring to protect the sealing lips in case of reverse pressure.

Range of Application

For inside dynamic sealing.

Operating pressure	≤ 20 MPa
Operating temperature	-260 to +315 °C
Surface speed	≤ 5 m/s

Subject to pv guidelines (chapter 4.6.6)

Compounds

The NLI seal is available in a wide range of polymers. These include unfilled PTFE, filled PTFE, UHMW-PE and many others. See the compound list for further information.

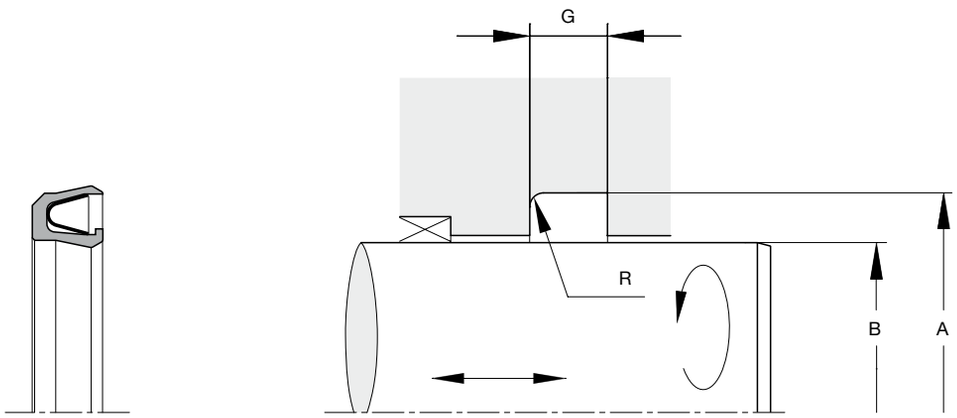

Housing dimensions

Nominal cross-section	Cross-section code	Recommended inner Ø range Tolerance h8 B (mm) ≥	≤	Outer Ø Tolerance H8 A (mm)	Groove width min. G (mm)	Radius max. R (mm)
1/16"	01	3.0	75	B + 2.84	2.4	0.30
3/32"	02	5.0	180	B + 4.52	3.6	0.50
1/8"	03	12.5	250	B + 6.15	4.8	0.50
3/16"	04	22.0	300	B + 9.45	7.1	0.75
1/4"	05	50.0	685	B + 12.12	9.5	0.75

Ordering example

Shaft or rod 70 mm
Cylinder bore 76.15 mm

NLI M007000 03 XXX Y

NLI	profile
M007000	inner groove diameter in mm times 100
03	cross-section code corresponding to a 6.15 mm groove diameter difference
XXX	jacket material
Y	spring-energizer material

The profile SLI is ideal for sealing abrasive media for rotating shafts without the possibility of a flange cavity in the groove. It can also be used in low-pressure reciprocating applications.

Profile SLI is particularly suitable for pumps, motors, rotary actuators and reciprocating stems.

Features

- Wiper-type dynamic (inside) lip.
- Heavy dynamic lip (inside) ensures longest life.
- Cantilever spring for low load-high compliance behaviour.
- Many high-resilience energizer options available, including choice of light, medium and heavy loads and NACE for oil field use.
- Available with silicone filling for food and drug applications.
- Allows the integration of a stand-off ring to protect the sealing lips in case of reverse pressure.

Range of Application

For inside dynamic sealing in abrasive media.

Operating pressure	≤ 20 MPa
Operating temperature	-260 to +315 °C
Surface speed	≤ 5 m/s

Subject to pv guidelines (chapter 4.6.6)

Compounds

The SLI seal is available in a wide range of polymers. These include unfilled PTFE, filled PTFE, UHMW-PE and many others. See the compound list for further information.

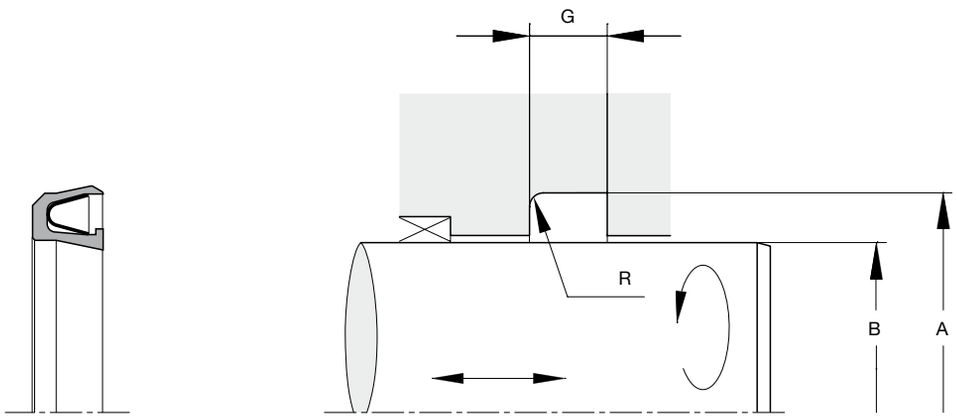

Housing dimensions

Nominal cross-section	Cross-section code	Recommended inner Ø range Tolerance h8 B (mm) ≥	≤	Outer Ø Tolerance H8 A (mm)	Groove width min. G (mm)	Radius max. R (mm)
1/16"	01	3.0	75	B + 2.84	2.4	0.30
3/32"	02	5.0	180	B + 4.52	3.6	0.50
1/8"	03	12.5	250	B + 6.15	4.8	0.50
3/16"	04	22.0	300	B + 9.45	7.1	0.75
1/4"	05	50.0	685	B + 12.12	9.5	0.75

Ordering example

Shaft or rod 70 mm
Cylinder bore 76.15 mm

SLI M007000 03 XXX Y

SLI	profile
M007000	inner groove diameter in mm times 100
03	cross-section code corresponding to a 6.15 mm groove diameter difference
XXX	jacket material
Y	spring-energizer material

The profile NLO is ideal for sealing outside rotating housings. It can also be used in low-pressure reciprocating piston applications.

Features

- Heavy dynamic lip (outside) ensures longest life.
- Cantilever spring for low load-high compliance behaviour.
- Many high-resilience energizer options available, including choice of light, medium and heavy loads and NACE for oil field use.
- Available with silicone filling for food and drug applications.
- Allows the integration of a stand-off ring to protect the sealing lips in case of reverse pressure.

Range of Application

For outside dynamic sealing.

Operating pressure	≤ 20 MPa
Operating temperature	-260 to +315 °C
Surface speed	≤ 5 m/s

Subject to pv guidelines (chapter 4.6.6)

Compounds

The NLO seal is available in a wide range of polymers. These include unfilled PTFE, filled PTFE, UHMW-PE and many others. See the compound list for further information.

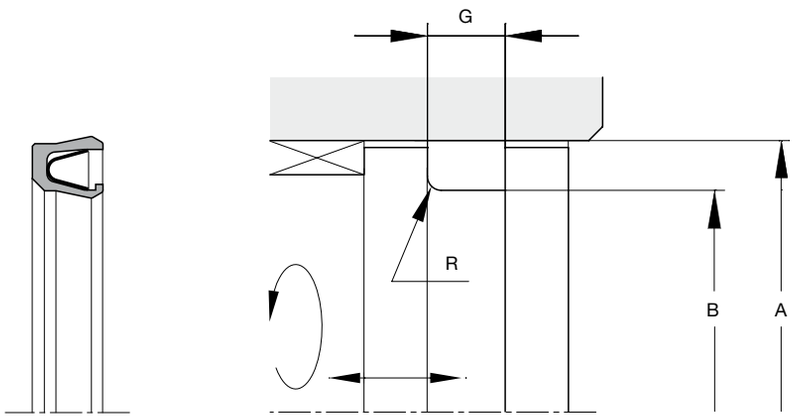

Housing dimensions

Nominal cross-section	Cross-section code	Recommended outer Ø range Tolerance H8 A (mm) ≥	≤	Inner Ø Tolerance h8 B (mm)	Groove width min. G (mm)	Radius max. R (mm)
1/16"	01	6.0	75	A - 2.84	2.4	0.30
3/32"	02	9.5	180	A - 4.52	3.6	0.50
1/8"	03	19.0	250	A - 6.15	4.8	0.50
3/16"	04	31.5	300	A - 9.45	7.1	0.75
1/4"	05	63.0	685	A - 12.12	9.5	0.75

Ordering example

Piston groove 70 mm
Cylinder bore 76.15 mm

NLO M007615 03 XXX Y

NLO	profile
M007615	outer groove diameter in mm times 100
03	cross-section code corresponding to a 6.15 mm groove diameter difference
XXX	jacket material
Y	spring-energizer material

The profile SLO is ideal for sealing abrasive media with outside rotating housings. It can also be used in low-pressure reciprocating applications.

Features

- Wiper-type dynamic (OD) lip.
- Heavy dynamic lip (outside) ensures longest life.
- Cantilever spring for low-load/high-compliance behaviour.
- Many high-resilience energizer options available, including choice of light, medium and heavy loads and NACE for oil field use.
- Available with silicone filling for food and drug applications.
- Allows the integration of a stand-off ring to protect the sealing lips in case of reverse pressure.

Range of Application

For outside dynamic sealing in abrasive media.

Operating pressure	≤ 20 MPa
Operating temperature	-260 to +315 °C
Surface speed	≤ 5 m/s

Subject to pv guidelines (chapter 4.6.6)

Compounds

The SLO seal is available in a wide range of polymers. These include unfilled PTFE, filled PTFE, UHMW-PE and many others. See the compound list for further information.

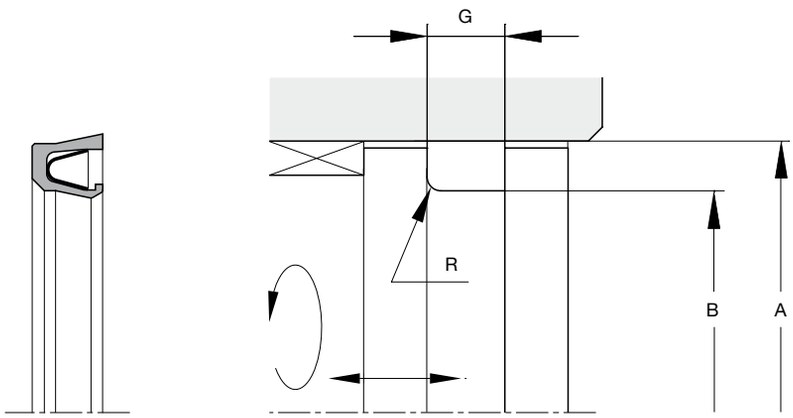

Housing dimensions

Nominal cross-section	Cross-section code	Recommended outer Ø range Tolerance H8 A (mm) ≥	≤	Inner Ø Tolerance h8 B (mm)	Groove width min. G (mm)	Radius max. R (mm)
1/16"	01	6.0	75	A - 2.84	2.4	0.30
3/32"	02	9.5	180	A - 4.52	3.6	0.50
1/8"	03	19.0	250	A - 6.15	4.8	0.50
3/16"	04	31.5	300	A - 9.45	7.1	0.75
1/4"	05	63.0	685	A - 12.12	9.5	0.75

Ordering example

Piston groove 70 mm
Cylinder bore 76.15 mm

SLO M007615 03 XXX Y

SLO	profile
M007615	outer groove diameter in mm times 100
03	cross-section code corresponding to a 6.15 mm groove diameter difference
XXX	jacket material
Y	spring-energizer material

The profile NLA is ideal for static applications where there is need for a higher deflection due to wider gland tolerance or excessive expansion and contraction. NLA can also be used for inside and outside dynamic applications.

Features

- Symmetric lip design.
- Cantilever spring for low load-high compliance behaviour.
- Many high-resilience energizer options available, including choice of light, medium and heavy loads and NACE for oil field use.
- Available with silicone filling for food and drug applications.
- Allows the integration of a stand-off ring to protect the sealing lips in case of reverse pressure.

Range of Application

For inside dynamic sealing.

Operating pressure	≤ 20 MPa
Operating temperature	-260 to +315 °C
Surface speed	≤ 5 m/s

Subject to pv guidelines (chapter 4.6.6)

Compounds

The NLI seal is available in a wide range of polymers. These include unfilled PTFE, filled PTFE, UHMW-PE and many others. See the compound list for further information.

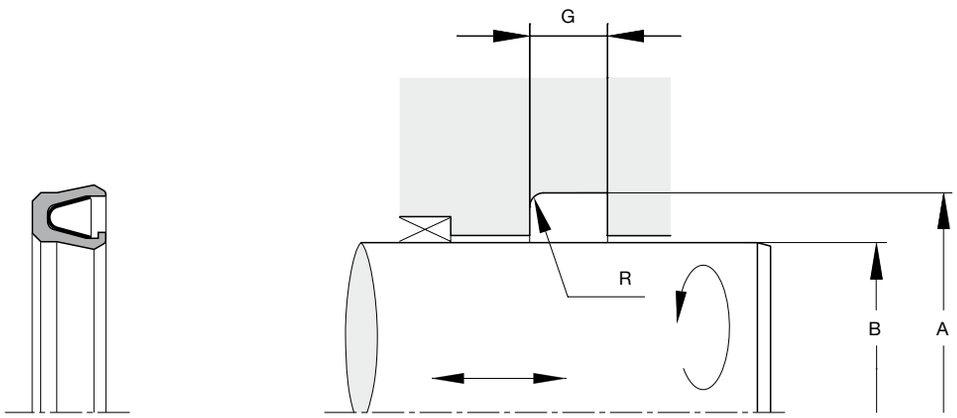

Housing dimensions

Nominal cross-section	Cross-section code	Recommended inner Ø range Tolerance h8 B (mm) ≥	≤	Outer Ø Tolerance H8 A (mm)	Groove width min. G (mm)	Radius max. R (mm)
1/16"	01	3.0	75	B + 2.84	2.4	0.30
3/32"	02	5.0	180	B + 4.52	3.6	0.50
1/8"	03	12.5	250	B + 6.15	4.8	0.50
3/16"	04	22.0	300	B + 9.45	7.1	0.75
1/4"	05	50.0	685	B + 12.12	9.5	0.75
3/8”	06	300.0	1400	B + 18.75	14.5	0.75
1/2”	07	300.0	3000	B + 25.40	18.0	0.75

Ordering example

Shaft or rod 70 mm
Cylinder bore 76.15 mm

NLA M007000 03 XXX Y

NLA	profile
M007000	inner groove diameter in mm times 100
03	cross-section code corresponding to a 6.15 mm groove diameter difference
XXX	jacket material
Y	spring-energizer material

The profile BAI is ideal for sealing reciprocating actuator rods.

Features

- Heavy dynamic lip (inside) ensures longest life.
- Short, wiper-type dynamic lip reduces frictional forces due to hydrostatic pressure.
- Helical spring for high load and small deflection range.
- Squared, long static lip stabilizes the seal.
- Widest range of cross-sections and diameters available, including sizes for upgrading standard O-ring grooves.
- Many high-resilience energizer options available, including choice of light, medium and heavy loads and NACE for oil field use.
- Low-cost elastomeric energizers available, all with excellent fatigue resistance.

Range of Application

For reciprocating rod sealing.

Operating pressure	≤ 20 MPa
Operating temperature	-260 to +315 °C
Surface speed	≤ 15 m/s

Compounds

The BAI seal is available in a wide range of polymers. These include unfilled PTFE, filled PTFE, UHMW-PE and many others. See the compound list for further information.

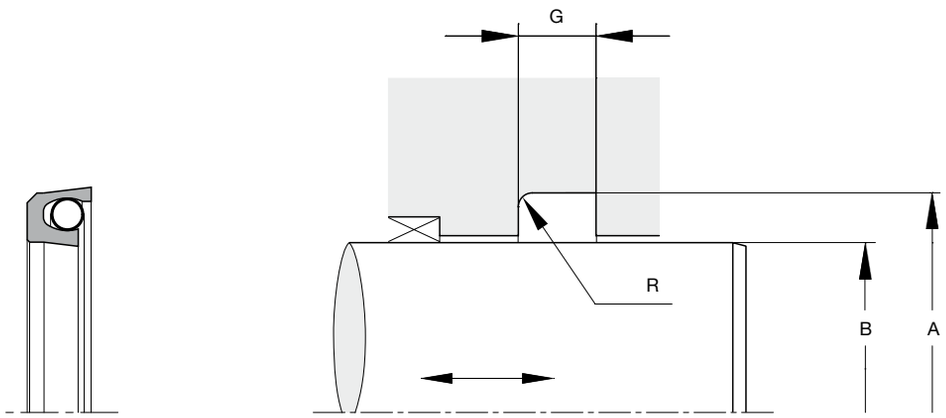

Housing dimensions

Nominal cross-section	Cross-section code	Recommended inner Ø range Tolerance h8 B (mm) ≥	≤	Outer Ø Tolerance H8 A (mm)	Groove width min. G (mm)	Radius max. R (mm)
1/16"	01	7.5	75	B + 2.84	2.4	0.30
3/32"	02	5.5	180	B + 4.52	3.6	0.50
1/8"	03	6.0	250	B + 6.15	4.8	0.50
3/16"	04	12.5	300	B + 9.45	7.1	0.75
1/4"	05	50.0	500	B + 12.12	9.5	0.75
3/8"	06	150.0	1400	B + 18.75	13.3	0.75
1/2"	07	300.0	3000	B + 25.40	18.0	0.75

Ordering example

Rod 70 mm
Cylinder bore 76.15 mm

BAI M007000 03 XXX Y

BAI	profile
M007000	inner groove diameter in mm times 100
03	cross-section code corresponding to a 6.15 mm groove diameter difference
XXX	jacket material
Y	spring-energizer material

The profile BHI is ideal for sealing high-pressure, reciprocating actuator rods.

Features

- Extended heel reduces effects of extrusion.
- Heavy dynamic lip (inside) ensures longest life.
- Short, wiper-type dynamic lip reduces frictional forces due to hydrostatic pressure.
- Helical spring for high load and small deflection range.
- Squared, long static lip stabilizes the seal.
- Widest range of cross-sections and diameters available, including sizes for upgrading standard O-ring grooves.
- Many high-resilience energizer options available, including choice of light, medium and heavy loads and NACE for oil field use.
- Low-cost elastomeric energizers available, all with excellent fatigue resistance.

Range of Application

For high-pressure, reciprocating rod sealing.

Operating pressure	≤ 55 MPa
Operating temperature	-260 to +315 °C
Surface speed	≤ 15 m/s

Compounds

The BHI seal is available in a wide range of polymers. These include unfilled PTFE, filled PTFE, UHMW-PE and many others. See the compound list for further information.

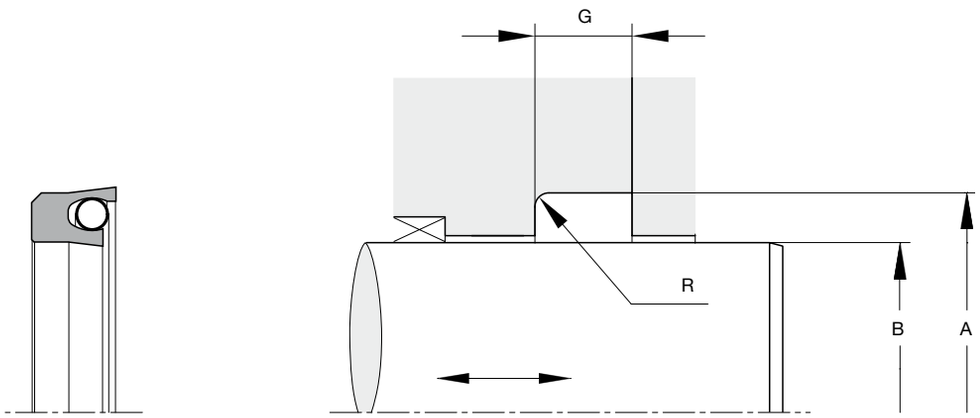

Housing dimensions

Nominal cross-section	Cross-section code	Recommended inner Ø range Tolerance h8 B (mm) ≥	≤	Outer Ø Tolerance H8 A (mm)	Groove width min. G (mm)	Radius max. R (mm)
1/16"	01	7.5	75	B + 2.84	3.8	0.30
3/32"	02	5.5	180	B + 4.52	4.6	0.50
1/8"	03	6.0	250	B + 6.15	6.0	0.50
3/16"	04	12.5	300	B + 9.45	8.5	0.75
1/4"	05	50.0	500	B + 12.12	12.1	0.75
3/8"	06	150.0	1400	B + 18.75	15.8	0.75
1/2"	07	300.0	3000	B + 25.40	20.5	0.75

Ordering example

Rod 70 mm
Cylinder bore 76.15 mm

BHI M007000 03 XXX Y

BHI	profile
M007000	inner groove diameter in mm times 100
03	cross-section code corresponding to a 6.15 mm groove diameter difference
XXX	jacket material
Y	spring-energizer material

The profile BAO is ideal for reciprocating piston sealing.

Features

- Heavy dynamic lip (outside) ensures longest life.
- Short, wiper-type dynamic lip reduces frictional forces due to hydrostatic pressure.
- Helical spring for high load and small deflection range.
- Squared, long static lip stabilizes the seal.
- Widest range of cross-sections and diameters available, including sizes for upgrading standard O-ring grooves.
- Many high-resilience energizer options available, including choice of light, medium and heavy loads and NACE for oil field use.
- Low-cost elastomeric energizers available, all with excellent fatigue resistance.

Range of Application

For reciprocating piston sealing.

Operating pressure	≤ 20 MPa
Operating temperature	-260 to +315 °C
Surface speed	≤ 15 m/s

Compounds

The BAO seal is available in a wide range of polymers. These include unfilled PTFE, filled PTFE, UHMW-PE and many others. See the compound list for further information.

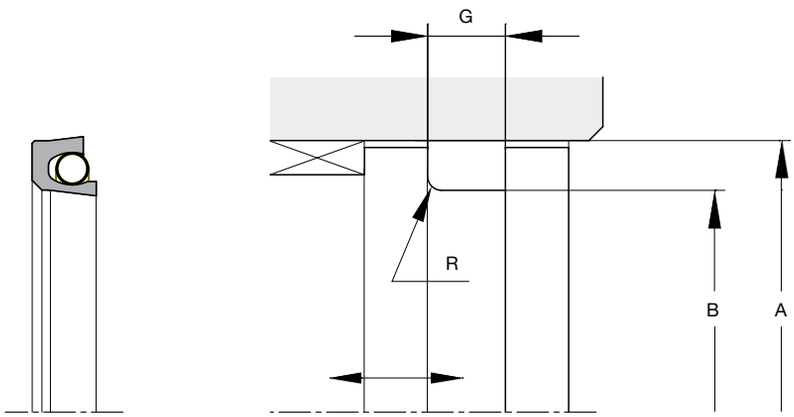

Housing dimensions

Nominal cross-section	Cross-section code	Recommended outer Ø range Tolerance H8 A (mm) ≥	≤	Inner Ø Tolerance h8 B (mm)	Groove width min. G (mm)	Radius max. R (mm)
1/16"	01	10.0	75	A - 2.84	2.4	0.30
3/32"	02	10.0	180	A - 4.52	3.6	0.50
1/8"	03	12.5	250	A - 6.15	4.8	0.50
3/16"	04	22.0	300	A - 9.45	7.1	0.75
1/4"	05	63.0	500	A - 12.12	9.5	0.75
3/8"	06	170.0	1400	A - 18.75	13.3	0.75
1/2"	07	325.0	3000	A - 25.40	18.0	0.75

Ordering example

Piston groove 70 mm
Cylinder bore 76.15 mm

BAO M007615 03 XXX Y

BAO	profile
M007615	outer groove diameter in mm times 100
03	cross-section code corresponding to a 6.15 mm groove diameter difference
XXX	jacket material
Y	spring-energizer material

The profile BHO is ideal for high-pressure piston sealing.

Features

- Extended heel that reduces effects of extrusion.
- Heavy dynamic lip (outside) ensures longest life.
- Short, wiper-type dynamic lip reduces frictional forces due to hydrostatic pressure.
- Helical spring for high load and small deflection range.
- Squared, long static lip stabilizes the seal.
- Widest range of cross-sections and diameters available, including sizes for upgrading standard O-ring grooves.
- Many high-resilience energizer options available, including choice of light, medium and heavy loads and NACE for oil field use.
- Low-cost elastomeric energizers available, all with excellent fatigue resistance.

Range of Application

For high-pressure, reciprocating piston sealing.

Operating pressure	≤ 55 MPa
Operating temperature	-260 to +315 °C
Surface speed	≤ 15 m/s

Compounds

The BHO seal is available in a wide range of polymers. These include unfilled PTFE, filled PTFE, UHMW-PE and many others. See the compound list for further information.

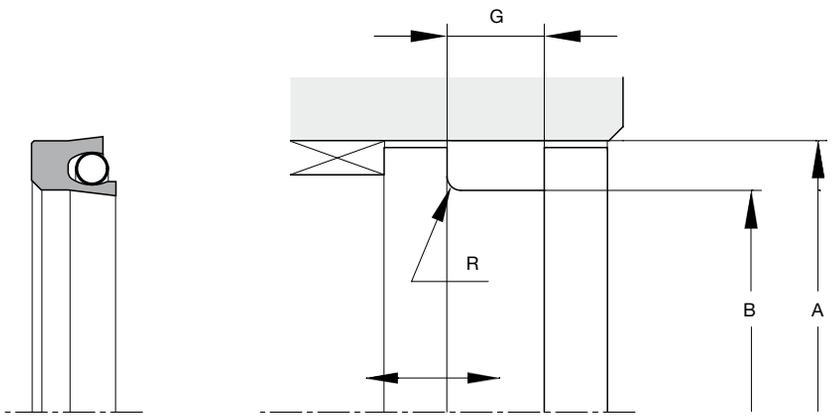

Housing dimensions

Nominal cross-section	Cross-section code	Recommended outer Ø range Tolerance H8 A (mm) ≥	≤	Inner Ø Tolerance h8 B (mm)	Groove width min. G (mm)	Radius max. R (mm)
1/16"	01	10.0	75	A - 2.84	3.8	0.30
3/32"	02	10.0	180	A - 4.52	4.6	0.50
1/8"	03	12.5	250	A - 6.15	6.0	0.50
3/16"	04	22.0	300	A - 9.45	8.5	0.75
1/4"	05	63.0	500	A - 12.12	12.1	0.75
3/8"	06	170.0	1400	A - 18.75	15.8	0.75
1/2"	07	325.0	3000	A - 25.40	20.5	0.75

Ordering example

Piston groove 70 mm
Cylinder bore 76.15 mm

BHO M007615 03 XXX Y

BHO	profile
M007615	outer groove diameter in mm times 100
03	cross-section code corresponding to a 6.15 mm groove diameter difference
XXX	jacket material
Y	spring-energizer material

The profile NAI is excellent for sealing internally pressurized static and intermittently dynamic flange applications.

Features

- Helical spring for high load and small deflection range.
- Resilient helical spring resists permanent set and maintains compliance to long-term flange separation.
- Many high-resilience energizer options available, including choice of light, medium and heavy loads and NACE for oil field use.
- Low-cost elastomeric energizers available, all with excellent fatigue resistance.

Range of Application

For internal static and intermittently dynamic flange sealing.

Operating pressure	≤ 55 MPa
Operating temperature	-260 to +315 °C
Surface speed	≤ 0.005 m/s

Compounds

The NAI seal is available in a wide range of polymers. These include unfilled PTFE, filled PTFE, UHMW-PE, PEEK and many others. See the compound list for further information.

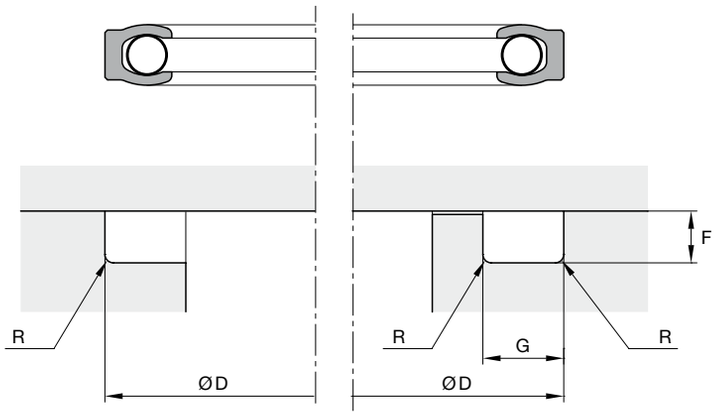

Housing dimensions

Nominal cross-section	Cross-section code	Recommended outer Ø range Tolerance H10 D (mm) ≥	≤	Groove depth range F (mm)	Groove width min. G (mm)	Radius max. R (mm)
1/16"	01	10	65	1.42 - 1.47	2.4	0.30
3/32"	02	14	100	2.26 - 2.31	3.6	0.50
1/8"	03	25	200	3.07 - 3.12	4.8	0.50
3/16"	04	48	350	4.62 - 4.68	7.1	0.75
1/4"	05	115	400	6.05 - 6.12	9.5	0.75
3/8"	06	200	1000	9.47 - 9.58	13.3	0.75
1/2"	07	325	3000	12.70 - 12.80	18.0	0.75

Ordering example

Outside groove 70 mm

NAI M007000 03 XXX Y

NAI	profile
M007000	outer groove diameter in mm times 100
03	cross-section code corresponding to a 3.07 mm groove height
XXX	jacket material
Y	spring-energizer material

The profile NHI is excellent for sealing internally high-pressurized static and intermittently dynamic flange applications.

Features

- Extended heel reduces the effects of extrusion.
- Helical spring for high load and small deflection range.
- Resilient helical spring resists permanent set and maintains compliance to long-term flange.
- Many high-resilience energizer options available, including choice of light, medium and heavy loads and NACE for oil field use.
- Low-cost elastomeric energizers available, all with excellent fatigue resistance.

Range of Application

For internal static and intermittently dynamic flange sealing - high-pressure.

Operating pressure	≤ 140 MPa
Operating temperature	-260 to +315 °C
Surface speed	≤ 0.005 m/s

Compounds

The NHI seal is available in a wide range of polymers. These include unfilled PTFE, filled PTFE, UHMW-PE, PEEK and many others. See the compound list for further information.

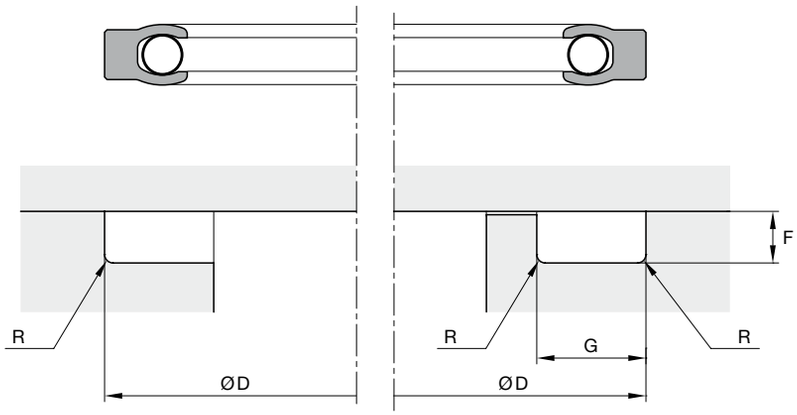

Housing dimensions

Nominal cross-section	Cross-section code	Recommended outer Ø range Tolerance H10 D (mm) ≥	≤	Groove depth range F (mm)	Groove width min. G (mm)	Radius max. R (mm)
1/16"	01	11	65	1.42 - 1.47	3.3	0.30
3/32"	02	14	100	2.26 - 2.31	4.5	0.50
1/8"	03	25	200	3.07 - 3.12	6.5	0.50
3/16"	04	48	350	4.62 - 4.68	8.0	0.75
1/4"	05	115	400	6.05 - 6.12	11.3	0.75
3/8"	06	200	1000	9.47 - 9.58	15.8	0.75
1/2"	07	325	3000	12.70 - 12.80	20.5	0.75

Ordering example

Outside groove 70 mm

NHI M007000 03 XXX Y

NHI	profile
M007000	outer groove diameter in mm times 100
03	cross-section code corresponding to a 3.07 mm groove height
XXX	jacket material
Y	spring-energizer material

The profile NAE is excellent for sealing externally pressurized static and intermittently dynamic flange applications.

Features

- Helical spring for high load and small deflection range.
- Resilient helical spring resists permanent set and maintains compliance to long-term flange.
- Many high-resilience energizer options available, including choice of light, medium and heavy loads and NACE for oil field use.
- Low-cost elastomeric energizers available, all with excellent fatigue resistance.

Range of Application

For external static and intermittently dynamic flange sealing.

Operating pressure	≤ 55 MPa
Operating temperature	-260 to +315 °C
Surface speed	≤ 0.005 m/s

Compounds

The NAE seal is available in a wide range of polymers. These include unfilled PTFE, filled PTFE, UHMW-PE, PEEK and many others. See the compound list for further information.

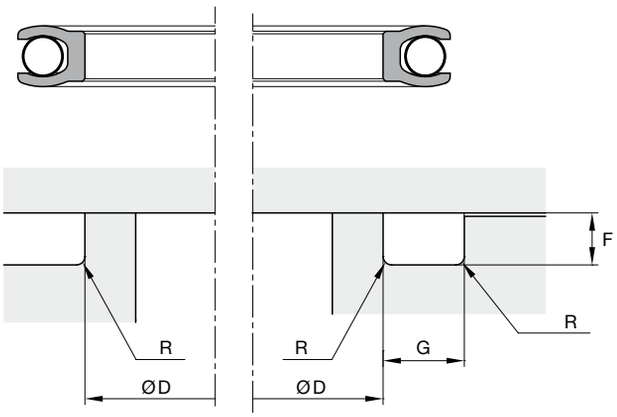

Housing dimensions

Nominal cross-section	Cross-section code	Recommended inner Ø range Tolerance h10 D (mm) ≥	≤	Groove depth range F (mm)	Groove width min. G (mm)	Radius max. R (mm)
1/16"	01	5	65	1.42 - 1.47	2.4	0.30
3/32"	02	10	100	2.26 - 2.31	3.6	0.50
1/8"	03	20	200	3.07 - 3.12	4.8	0.50
3/16"	04	40	350	4.62 - 4.68	7.1	0.75
1/4"	05	90	400	6.05 - 6.12	9.5	0.75
3/8"	06	200	1000	9.47 - 9.58	13.3	0.75
1/2"	07	300	3000	12.70 - 12.80	18.0	0.75

Ordering example

Inside groove 70 mm

NAE M007000 03 XXX Y

NAE	profile
M007000	inner groove diameter in mm times 100
03	cross-section code corresponding to a 3.07 mm groove height
XXX	jacket material
Y	spring-energizer material

The profile NHE is excellent for sealing internally high-pressurized static and intermittently dynamic flange applications.

Features

- Extended heel reduces the effects of extrusion.
- Helical spring for high load and small deflection range.
- Resilient helical spring resists permanent set and maintains compliance to long-term flange separation.
- Many high-resilience energizer options available, including choice of light, medium and heavy loads and NACE for oil field use.
- Low-cost elastomeric energizers available, all with excellent fatigue resistance.

Range of Application

For external static and intermittently dynamic flange sealing – high-pressure.

Operating pressure	≤ 140 MPa
Operating temperature	-260 to +315 °C
Surface speed	≤ 0.05 m/s

Compounds

The NHE seal is available in a wide range of polymers. These include unfilled PTFE, filled PTFE, UHMW-PE, PEEK and many others. See the compound list for further information.

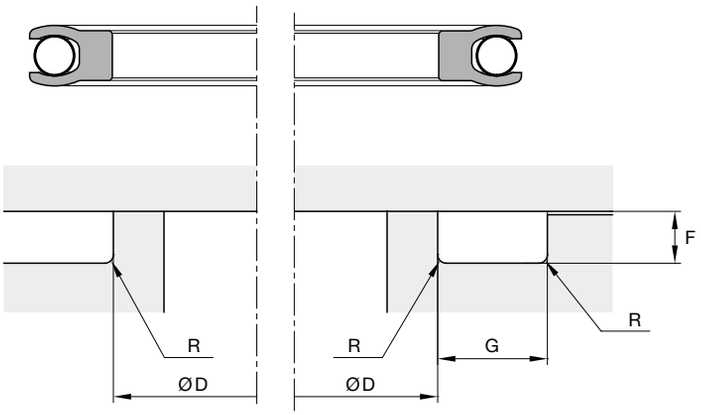

Housing dimensions

Nominal cross-section	Cross-section code	Recommended inner Ø range Tolerance h10 D (mm) ≥	≤	Groove depth range F (mm)	Groove width min. G (mm)	Radius max. R (mm)
1/16"	01	4.65	65	1.42 - 1.47	3.3	0.30
3/32"	02	10.00	100	2.26 - 2.31	4.5	0.50
1/8"	03	20.00	200	3.07 - 3.12	6.5	0.50
3/16"	04	40.00	350	4.62 - 4.68	8.0	0.75
1/4"	05	90.00	400	6.05 - 6.12	11.3	0.75
3/8"	06	200.00	1000	9.47 - 9.58	15.8	0.75
1/2"	07	300.00	3000	12.70 - 12.80	20.5	0.75

Ordering example

Inside groove 70 mm

NHE M007000 03 XXX Y

NHE	profile
M007000	inner groove diameter in mm times 100
03	cross-section code corresponding to a 3.07 mm groove height
XXX	jacket material
Y	spring-energizer material

The profile NLF is excellent for sealing static and dynamic internally pressurized flange applications, in particular where bolt load and friction are limited or a higher deflection range is required.

Features

- Cantilever spring for low sealing load and high compliance to long-term flange separation.
- Many high-resilience energizer options available, including choice of light, medium and heavy loads and NACE for oil field use.
- Available with silicone filling for food and drug applications.

Range of Application

For internal static and dynamic flange sealing.

Operating pressure	≤ 35 MPa
Operating temperature	-260 to +315 °C
Surface speed	≤ 5 m/s

Subject to pv guidelines (chapter 4.6.6)

Compounds

The NLF seal is available in a wide range of polymers. These include unfilled PTFE, filled PTFE, UHMW-PE and many others. See the compound list for further information.

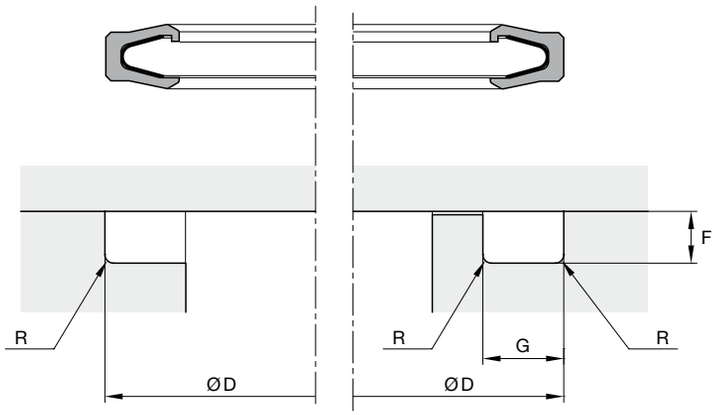

Housing dimensions

Nominal cross-section	Cross-section code	Recommended outer Ø range Tolerance H10 D (mm) ≥	≤	Groove depth range F (mm)	Groove width min. G (mm)	Radius max. R (mm)
1/16"	01	15	75	1.42 - 1.47	2.4	0.30
3/32"	02	20	180	2.26 - 2.31	3.6	0.50
1/8"	03	30	250	3.07 - 3.12	4.8	0.50
3/16"	04	50	300	4.62 - 4.68	7.1	0.75
1/4"	05	105	685	6.05 - 6.12	9.5	0.75
3/8"	06	300	1400	9.47 - 9.58	14.5	0.75
1/2"	07	300	3000	12.70 - 12.80	18.0	0.75

Ordering example

Outside groove 70 mm

NLF M007000 03 XXX Y

NLF	profile
M007000	outer groove diameter in mm times 100
03	cross-section code corresponding to a 3.07 mm groove height
XXX	jacket material
Y	spring-energizer material

The profile NLG is excellent for sealing static and dynamic externally pressurized flange applications, in particular where bolt load and friction are limited or a higher deflection range is required.

Features

- Cantilever spring for low sealing load and high compliance to long-term flange separation.
- Many high-resilience energizer options available, including choice of light, medium and heavy loads and NACE for oil field use.
- Available with silicone filling for food and drug applications.

Range of Application

For external static and dynamic flange sealing.

Operating pressure	≤ 35 MPa
Operating temperature	-260 to +315 °C
Surface speed	≤ 5 m/s

Subject to pv guidelines (chapter 4.6.6)

Compounds

The NLG seal is available in a wide range of polymers. These include unfilled PTFE, filled PTFE, UHMW-PE and many others. See the compound list for further information.

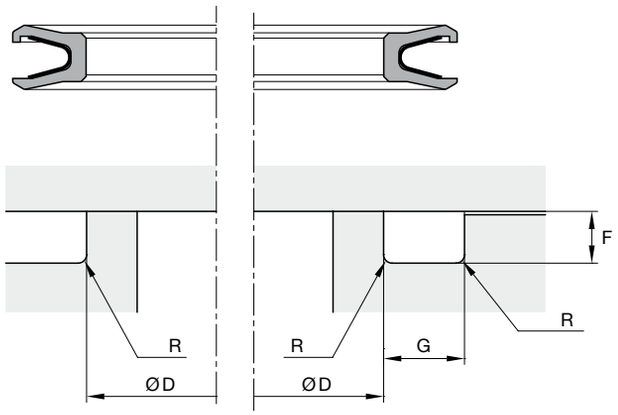

Housing dimensions

Nominal cross-section	Cross-section code	Recommended outer Ø range Tolerance H10 D (mm) ≥	≤	Groove depth range F (mm)	Groove width min. G (mm)	Radius max. R (mm)
1/16"	01	10	75	1.42 - 1.47	2.4	0.30
3/32"	02	14	125	2.26 - 2.31	3.6	0.50
1/8"	03	25	400	3.07 - 3.12	4.8	0.50
3/16"	04	45	400	4.62 - 4.68	7.1	0.75
1/4"	05	85	450	6.05 - 6.12	9.5	0.75
3/8"	06	300	1400	9.47 - 9.58	14.5	0.75
1/2"	07	300	3000	12.70 - 12.80	18.0	0.75

Ordering example

Inside groove 70 mm

NLG M007000 03 XXX Y

NLG	profile
M007000	inner groove diameter in mm times 100
03	cross-section code corresponding to a 3.07 mm groove height
XXX	jacket material
Y	spring-energizer material

The profile NRI is ideal for sealing internally pressurized flanges, in particular cryogenic static and intermittently dynamic applications.

Features

- Wiper-type lips.
- Cantilever spring with high-load/high-compliance to resist permanent set and long-term flange separation.
- Rigid spring acts as a control band to resist low-temperature shrinkage.
- Available in large cross-sections, ideal for large-diameter seals.
- NACE-approved energizers available for oil field use.

Range of Application

For internal cryogenic static and intermittently dynamic flange sealing.

Operating pressure	≤ 35 MPa
Operating temperature	-260 to +315 °C
Surface speed	≤ 0.005 m/s

Compounds

The NRI seal is available in a wide range of polymers. These include unfilled PTFE, filled PTFE, UHMW-PE, PEEK and many others. See the compound list for further information.

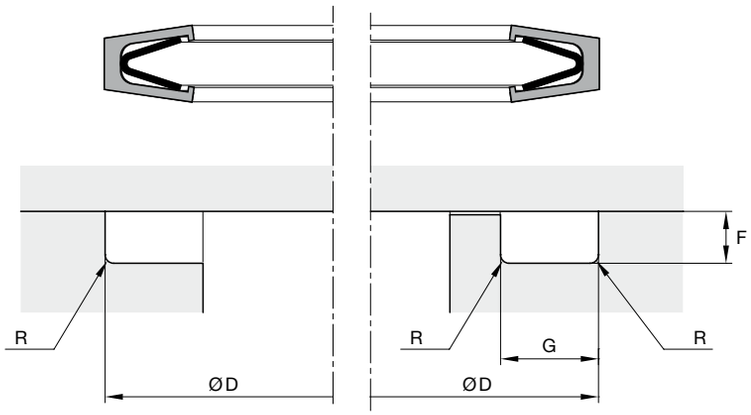

Housing dimensions

Nominal cross-section	Cross-section code	Recommended outer Ø range Tolerance H10 D (mm)		Groove depth range F (mm)	Groove width min. G (mm)	Radius max. R (mm)
		≥	≤			
3/16"	04	50	300	4.72 - 4.78	9.0	0.75
1/4"	05	80	1000	6.05 - 6.12	10.0	0.75
3/8"	06	150	1200	9.47 - 9.58	13.5	0.75
1/2"	07	200	3000	12.70 - 12.80	18.5	0.75

Ordering example

Outside groove 100 mm

NRI M010000 04 XXX Y

NRI	profile
M010000	outer groove diameter in mm times 100
04	cross-section code corresponding to a 4.62 mm groove height
XXX	jacket material
Y	spring-energizer material

The profile HRI is ideal for sealing internally high-pressurized flanges, in particular cryogenic static and intermittently dynamic applications.

Features

- Extended heel to resist extrusion effects.
- Wiper-type lips.
- Cantilever spring with high-load/high-compliance to resist permanent set and long-term flange separation.
- Rigid spring acts as a control band to resist low temperature shrinkage.
- Available in large cross-sections, ideal for large-diameter seals.
- NACE-approved energizers available for oil field use.

Range of Application

For internal cryogenic static and intermittently dynamic flange sealing – high-pressure.

Operating pressure	≤ 55 MPa
Operating temperature	-260 to +315 °C
Surface speed	≤ 0.005 m/s

Compounds

The HRI seal is available in a wide range of polymers. These include unfilled PTFE, filled PTFE, UHMW-PE, PEEK and many others. See the compound list for further information.

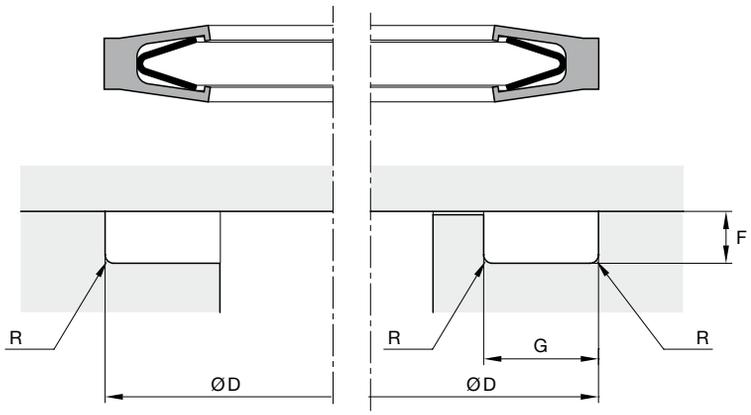

Housing dimensions

Nominal cross-section	Cross-section code	Recommended outer Ø range Tolerance H10 D (mm)		Groove depth range F (mm)	Groove width min. G (mm)	Radius max. R (mm)
		≥	≤			
3/16"	04	50	300	4.72 - 4.78	9.9	0.75
1/4"	05	80	1000	6.05 - 6.12	11.8	0.75
3/8"	06	150	1200	9.47 - 9.58	16.0	0.75
1/2"	07	200	3000	12.70 - 12.80	21.0	0.75

Ordering example

Outside groove 100 mm

HRI M010000 04 XXX Y

HRI	profile
M010000	outer groove diameter in mm times 100
04	cross-section code corresponding to a 4.62 mm groove height
XXX	jacket material
Y	spring-energizer material

The profile NRE is ideal for sealing externally pressurized flanges, in particular cryogenic static and intermittently dynamic applications.

Features

- Wiper-type lips.
- Cantilever spring with high-load/high-compliance to resist permanent set and long-term flange separation.
- Available in large cross-sections, ideal for large-diameter seals.
- NACE-approved energizers available for oil field use

Range of Application

For external cryogenic static and intermittently dynamic flange sealing.

Operating pressure	≤ 35 MPa
Operating temperature	-260 to +315 °C
Surface speed	≤ 0.005 m/s

Compounds

The NRE seal is available in a wide range of polymers. These include unfilled PTFE, filled PTFE, UHMW-PE, PEEK and many others. See the compound list for further information.

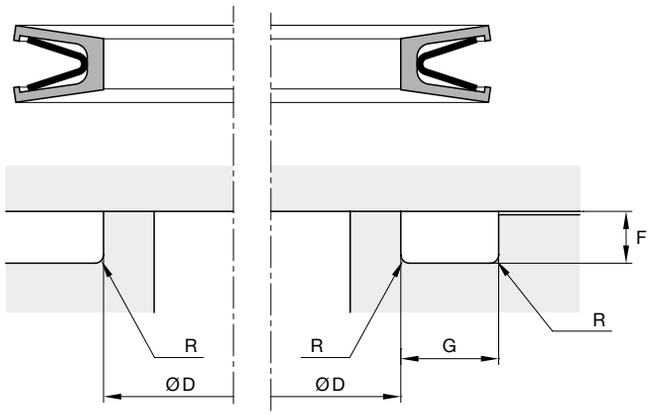

Housing dimensions

Nominal cross-section	Cross-section code	Recommended inner Ø range Tolerance h10 D (mm) ≥	≤	Groove depth range F (mm)	Groove width min. G (mm)	Radius max. R (mm)
3/16"	04	50	300	4.72 - 4.78	9.0	0.75
1/4"	05	80	1000	6.05 - 6.12	10.0	0.75
3/8"	06	150	1200	9.47 - 9.58	13.5	0.75
1/2"	07	200	3000	12.70 - 12.80	18.5	0.75

Ordering example

Inside groove 100 mm

NRE M010000 04 XXX Y

NRE	profile
M010000	inner groove diameter in mm times 100
04	cross-section code corresponding to a 4.62 mm groove height
XXX	jacket material
Y	spring-energizer material

The profile HRE is ideal for sealing externally high-pressurized flanges, in particular cryogenic static and intermittently dynamic applications.

Features

- Extended heel to resist extrusion effects.
- Wiper-type lips.
- Cantilever spring with high-load/high-compliance to resist permanent set and long-term flange separation.
- Available in large cross-sections, ideal for large-diameter seals.
- NACE-approved energizers available for oil field use.

Range of Application

For external cryogenic static and intermittently dynamic flange sealing – high-pressure.

Operating pressure	≤ 55 MPa
Operating temperature	-260 to +315 °C
Surface speed	≤ 0.005 m/s

Compounds

The HRE seal is available in a wide range of polymers. These include unfilled PTFE, filled PTFE, UHMW-PE, PEEK and many others. See the compound list for further information.

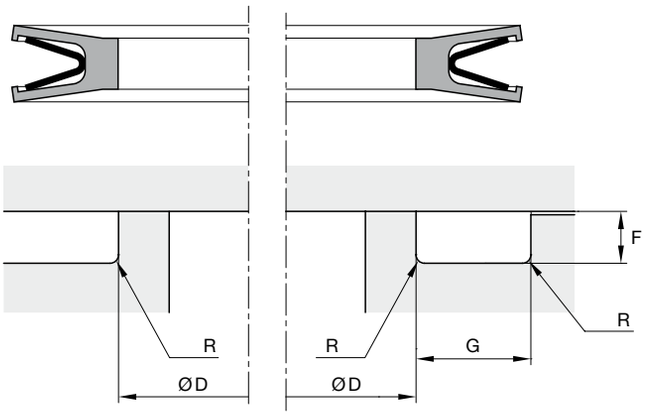

Housing dimensions

Nominal cross-section	Cross-section code	Recommended inner Ø range Tolerance h10 D (mm) ≥	≤	Groove depth range F (mm)	Groove width min. G (mm)	Radius max. R (mm)
3/16"	04	50	300	4.72 - 4.78	9.9	0.75
1/4"	05	80	1000	6.05 - 6.12	11.8	0.75
3/8"	06	150	1200	9.47 - 9.58	16.0	0.75
1/2"	07	200	3000	12.70 - 12.80	21.0	0.75

Ordering example

Inside groove 100 mm

HRE M010000 04 XXX Y

HRE	profile
M010000	inner groove diameter in mm times 100
04	cross-section code corresponding to a 4.62 mm groove height
XXX	jacket material
Y	spring-energizer material

4.4 Non-standard FlexiSeal® types

Besides the standard range of FlexiSeals® there are many additional, non-standard types which have been developed, customized and proven over the years for specific applications in many different industries and final products. Our consultancy service will frequently recommend these for special requirements. Dimensional data has not been provided as many of these seal types are customized for specific applications and groove configurations which differ from the standard recommendations.

To order or request a quotation for a non-standard FlexiSeal®, please advise us of all your requirements by completing the 'Application data sheet' included in chapter 8 of this design manual. Please forward the completed form to our consultancy service or to your local sales consultant. Our consultancy service will respond quickly with detailed recommendations.

Most non-standard FlexiSeal® types can be conveniently grouped within the following categories

- Radial seals for rotary, reciprocating and static sealing.
- Radial wiper and wiper seals.
- Radial flanged seals for high speed rotary sealing and cryogenic applications.
- Radial seals to fit into standard lip seal grooves.
- Double cavity seals to suit large groove sections.
- Trapped anti-blowout seals.
- Conical seals.
- Closed seals for sanitary/food applications.
- Double-acting seals.
- Seals with canted coil spring.
- Shaped seals.
- FlexiSeals® for standard O-ring grooves.

4.4.1 Radial seals for rotary, reciprocating and static sealing

4.4.1.1 Asymmetrical lip length

The long lip design serves as a lip protection device in low-pressure reciprocating applications or in case of reverse pressure difference (back-pressure).

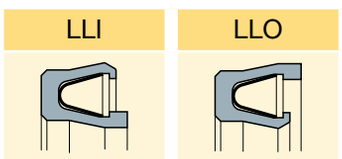

Fig. 4.7 – FlexiSeal® types with asymmetrical lip length.

4.4.1.2 Asymmetrical lip thickness

Seal designs with asymmetrical lip thickness can be used when additional wear resistance is required on the dynamic side of the application.
In cryogenic environments a thinner outer lip will help to restrict the shrinking forces on the spring element.

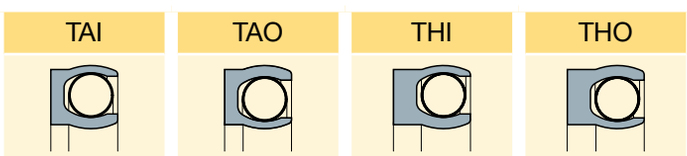

Fig. 4.8 – FlexiSeal® types with asymmetrical lip thickness.

4.4.1.3 Semi-exposed spring

A semi-exposed spring serves as a lip protection device in case of a reverse pressure difference (back-pressure). When the spring touches the front of the groove wall, an additional radial sealing force is generated.

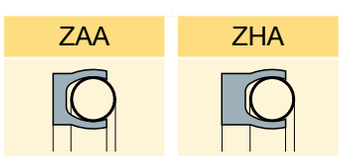

Fig. 4.9 – FlexiSeal® types with semi-exposed spring.

4.4.2 Radial wipers

These seal designs prevent abrasive particles from accumulating between the seal lip and the mating surface, which increases wear of the seal and the mating surface. The wiper feature is available with both helical and cantilever spring types.

FlexiSeal® profiles SAI and SAO are intended for intermittent or slow dynamic applications with wiper function on the inner or outer diameter. Their shorter dynamic lip reduces friction in pressurized conditions. Types SHI and SHO are high-pressure versions.

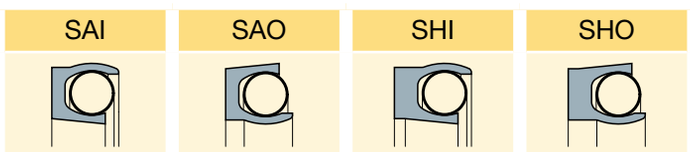

Fig. 4.10 – FlexiSeal® wiper/wiper types with asymmetrical lip length.

The profiles BAA, BHA and BLA have a symmetrical wiper lip design and can be used for reciprocating or rotating movements on either inner or outer diameter.

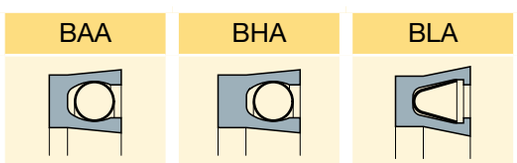

Fig. 4.11 – FlexiSeal® wiper/wiper types with symmetrical lip.

4.4.3 Flanged radial seals for high-speed rotary sealing and cryogenic applications

The flange feature prevents the seal from rotating within its groove as the high-speed hardware rotates against the seal's surface.
In cryogenic environments or applications with large temperature variations a restrained outside flange minimizes seal shrinkage so that it maintains firm contact against the mating surfaces.

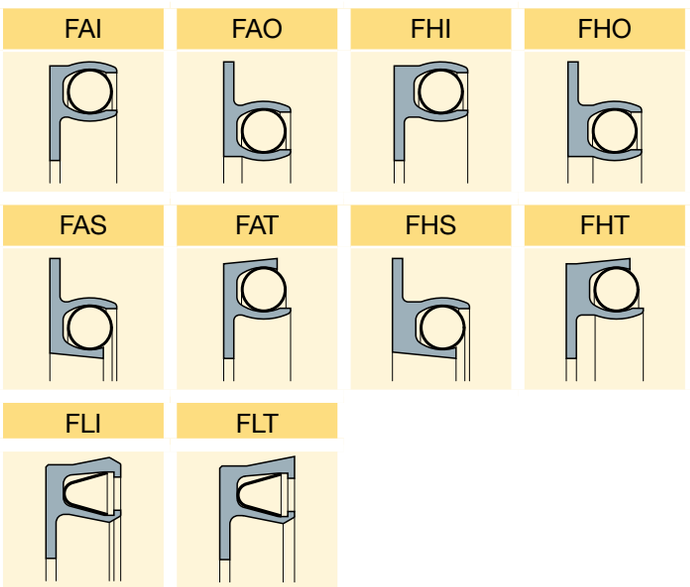

Fig. 4.12 – Flanged FlexiSeal® types.

4.4.4 Radial rotary seals to fit into standard grooves for elastomeric lip seals

These special seals are designed for high-speed applications and fit into existing standard elastomeric lip seal grooves.
The elastomeric O-ring prevents the seal from rotating with the dynamic side and provides a secondary sealing function at the static side.
An additional metal retainer ring (RRI) prevents thermally induced shrinkage in case of large-diameter seals and extreme temperatures.
All types are also available with a dynamic wiper lip.

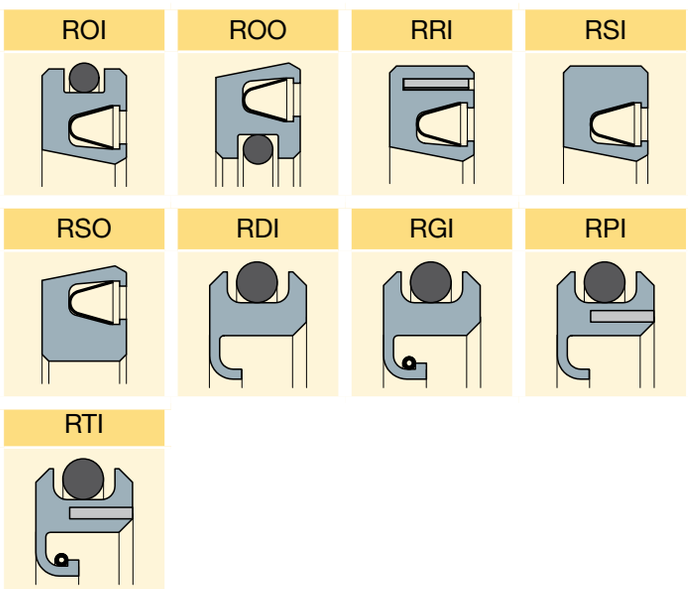

Fig. 4.13 – Rotary FlexiSeal® types and lip seals to fit into standard grooves for elastomeric lip seals.

4.4.5 Double-cavity seals to suit large groove sections

Double-cavity seals are available to fill large groove heights when the groove length is limited.

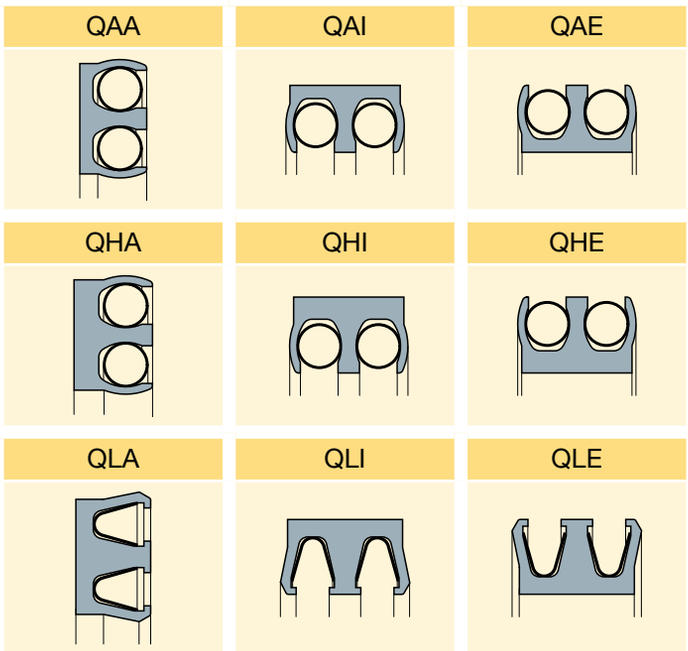

Fig. 4.14 – FlexiSeal® types with double spring cavity.

4.4.6 Trapped anti-blowout seals

These specific seal designs are used where rapid fluid flow may dislodge a non-trapped seal from its sealing groove. Constraint in a pocket also provides additional control over thermal movement of the seal.
A typical application is a butterfly valve where the AAI type is secured in its groove when exposed to high velocities when the pressurized valve is opened.
Anti-blowout designs are also used when the seal needs to pass port holes.

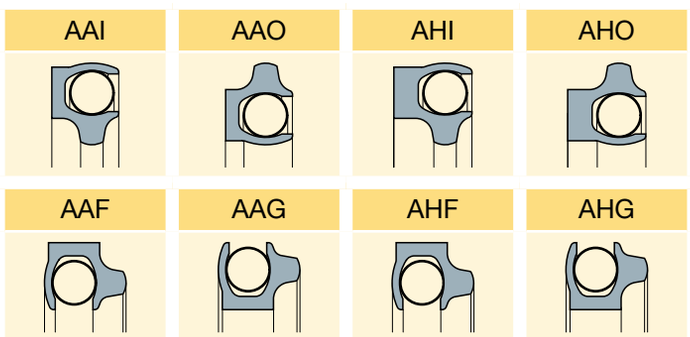

Fig. 4.15 – Trapped anti-blowout FlexiSeal® types.

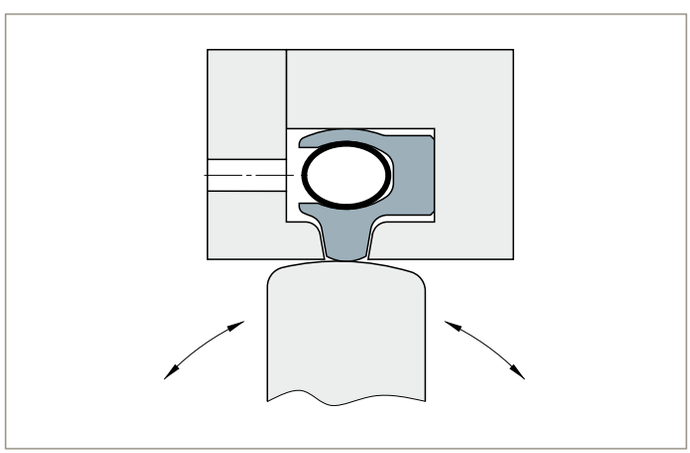

Fig. 4.16 – Anti-blowout FlexiSeal® in a butterfly valve.

4.4.7 Conical seals

These seals suit applications such as angular ball valves and poppet valves which have conical sealing surfaces. Conical seals in anti-blowout configuration are available as well.

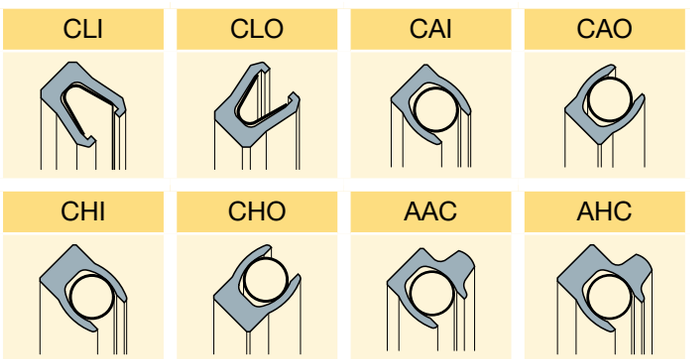

Fig. 4.17 – Conical FlexiSeal® types.

4.4.8 Closed seals for sanitary/ food applications

A closed seal design prevents the medium from getting trapped in the spring and allows an easier cleaning process. It also protects the spring against chemical attack from the medium. Typical applications are food filling and other dispensing equipment.

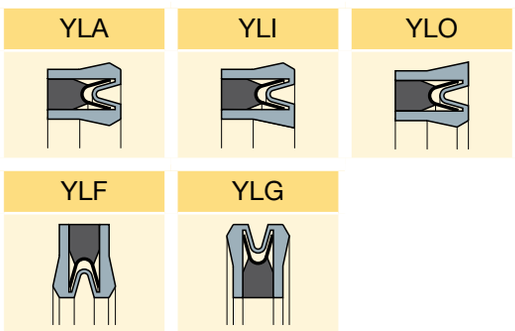

Fig. 4.18 – Closed FlexiSeal® types.

4.4.9 Double-acting seals

Double-acting seals are designed for exposure in reversing system pressures. Only for low-pressures. Optional use of metallic stand-off rings for protection against collision of the lips with the groove front wall.
If the application conditions are less severe, please refer to our slipper seal section for additional double-acting seal types.

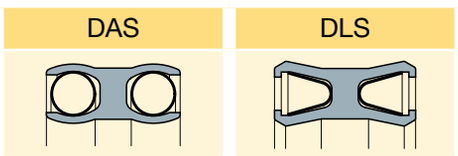

Fig. 4.19 – Double-acting FlexiSeal® types.

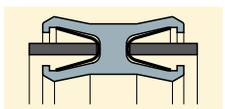

Fig. 4.20 – Double-acting FlexiSeal® with stand-off rings.

4.4.10 Seals with canted coil spring

These seal types feature a spring made from a round wire that is coiled into a canted or slanted shape. The result is a very flat load versus deflection curve, which makes them particularly suitable for sensitive friction applications where a low and constant load is required over a wide deflection range (Figure 4.22).
The canted coil design is intended for dynamic reciprocating and rotary applications but can also be used in static conditions when wide groove tolerance or misalignment is present.
The spring can be formed with extremely small coil diameters which lends itself for use in sealing applications with small cross-sections and small diameters. Available in radial and face seal configurations.
Refer to chapter 4.6.7 for more information on the canted coil spring design.

Fig. 4.21 – Canted coil spring.

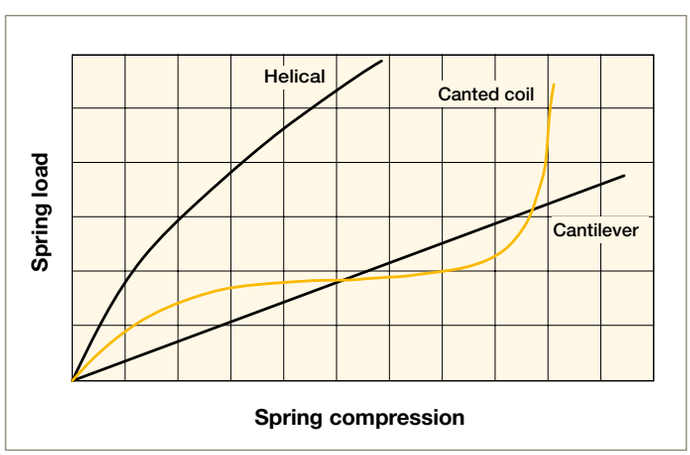

Fig. 4.22 – Canted coil spring load curve.

4.4.11 Shaped seals

Seal profiles with helical or canted coil springs can be formed into special, non-circular shapes.

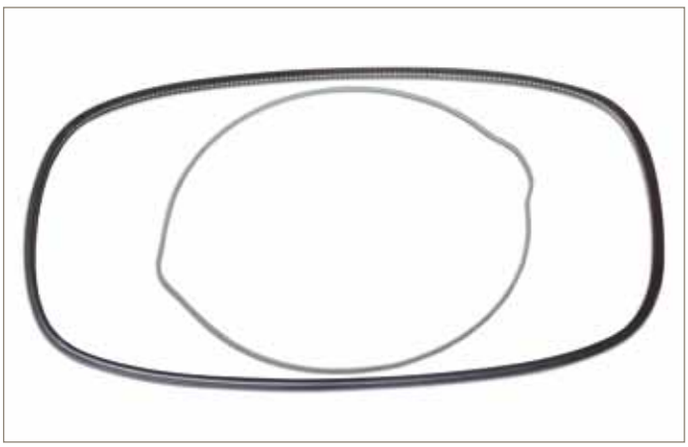

Fig. 4.23 – Shaped FlexiSeal® types.

4.4.12 FlexiSeals® for standard O-ring grooves

Standard grooves for elastomeric O-rings can also be used with FlexiSeals® when the operating conditions are too demanding.
Parker offers FlexiSeals® in a complete range of sizes conforming to the following O-ring groove specifications

- MIL-G-5514 Standard Grooves
- Standard Industrial (Fractional) Grooves
- Aerospace Standard AS4716 Grooves
- Japanese Industrial Grooves JIS B-2406

Please contact our consultancy service or your local sales representative for more information.

4.5 FlexiSeal® material selection

4.5.1 Jacket material

Parker draws on hundreds of PTFE compounds and other polymeric materials to manufacture the FlexiSeal® jacket profile. Our material range includes unfilled PTFE, standard and speciality filled PTFE compounds, TFM blends, UHMW polyethylene, thermoplastics, PEEK, polyimide, … Parker can meet your material requirements for polymer sealing in most environmental and operating conditions.

Fig. 4.24 – FlexiSeal® raw material.

The FlexiSeal® jacket material is designated with a single code in the standard part number (table 4.25)

XXX - M000000 - 00 - 000 - 0

Table 4.25 is a selection of our most popular jacket materials used for FlexiSeal®. Make an initial, possibly multiple, selection of all materials with appropriate application descriptions and service temperature ranges. The final selection may then be made using the performance rating values to choose a material with the best combination of characteristics for the intended service.

For guidance on selection of a material other than the ones listed, please contact our consultancy service.

Code	Description	Color
Polon® 001	Virgin PTFE	White
Polon® 002	PTFE + graphite	Black
Polon® 003	PTFE + glass fibre/MoS_2	Grey
Polon® 004	PTFE + bronze	Bronze
Polon® 005	PTFE + aromatic polyester	Cream
Polon® 006	UHMW-PE	Translucent
Polon® 007	PTFE + carbon/graphite	Black
Polon® 009	Modified virgin PTFE	White
Polon® 011	Modified PTFE	Turquoise
Polon® 031	Modified PTFE + glass fibre	Ivory
Polon® 045	PTFE + carbon fibre	Black
Polon® 063	PTFE + proprietary carbon fibre	Brown/red
Polon® 0F5	FDA-compliant polymer-filled PTFE	Cream
Polon® 0V6	Proprietary filled PTFE	Dark brown

Table 4.25 – FlexiSeal® jacket material selection.

Notes
1) High temperature end is subjected to extrusion gap guidelines.
2) Not recommended in rotary applications due to frictional heat generation.

Application	Temperature range (°C) [1]	Wear resistance [4]	Pressure/ extrusion resistance [4]	Chemical compability [4]	FDA compliant	NORSOK M-710 compliant	Minimum recommended dynamic surface hardness (HRC)
Best for static applications requiring positive sealing. Good in vacuum with low gas permeability. Good for cryogenic service.	-260 +260	1	1	5	Yes	No	25
Much better temperature resistance than virgin PTFE. Better extrusion resistance and higher wear resistance. Excellent for corrosive service, steam and hot water applications. Ideal for unlubricated service.	-260 +300	2	3	4	No	Yes	25
Excellent wear resistance because of internal lubrication with MoS_2. Often used for high-pressure extrusion resistance or high speed, high-pressure rotary applications. Only for use on very hard mating surface because of its abrasive properties.	-240 +300	5	4	4	No	No	60
Highly filled compound with excellent wear, temperature and pressure resistance. Ideal for high-speed applications. Limitations in use because of chemical incompatabilities.	-260 +300	5	5	2	No	No	45
A dynamic material for softer mating surfaces and a static material for high temperatures. Excellent wear resistance without abrasion. Not recommended for applications involving steam > 120 °C.	-260 +315	3	3	3	No	Yes	25
Among the toughest, most wear-resistant materials but with limited temperature and chemical resistance. Intended for reciprocating or very slow rotary applications. Good lubricity in water. Can serve in cryogenic conditions. Higher coefficient of friction than PTFE.	-260 +80	1 [2]	5	1	Yes	No	35
Particularly suited for highly corrosive service. Widely used in dynamic steam and water applications. Excellent general purpose material and often used in rotary applications. Performs well in non-lubricated systems.	-260 +300	4	4	4	No	No	50
Similar to virgin PTFE but lower gas permeability, higher extrusion resistance and smoother surface on machined parts. Can be used in slow, infrequent dynamics. Good for cryogenic service.	-260 +280	1	1	5	Yes	Yes	25
Lower creep than virgin PTFE, good wear resistance.	-260 +260	2	2	4	No	No	25
Has positive impact on pressure resistance. Improves wear resistance and offers good compressive strength. Only for use on very hard mating surfaces. Do not use with strong bases or hydrofluoric acid.	-260 +300	4	5	4	No	Yes	60
Carbon fibre lowers creep, increases flexural and compressive modulus and raises hardness. Thermal expansion is lower and electrical conductivity is higher. Good for strong bases and hydrofluoric acids. Excellent wear behaviour in aquaeous environment.	-260 +300	4	4	4	No	Yes	50
Excellent all-purpose material. Best for dynamic applications running on moderate to hard surfaces. High wear-rate material with low abrasion.	-260 +300	4	4	3	No	Yes	50
Dynamic applications that require FDA approved material.	-260 +300	3	3	3	Yes	No	25
Best wear resistance among filled PTFEs. Gentle to soft mating surfaces.	-260 +300	5	3	3	No	Yes	25

3) We emphasize that this table should be used as a guide only. The data provided above is based primarily on laboratory and service tests, but does not take into account all variables that can be encountered in actual use. Therefore, it is always advisable to test the material under actual service conditions before specification. If this is not practical, tests should be designed in such a way that service conditions are simulated as closely as possible.

4) 1 is lowest, 5 is highest rating.

4.5.2 Energizer material

The FlexiSeal® energizer material is designated with a single code in the standard part number (table 4.27):

XXX - M000000 - 00 - 000 - 0

Refer to tables 4.26 and 4.27 to select the spring energizer code for your seal type and application.

Energizer material	Application
300 series stainless steel (301, 302, 304)	• General-purpose spring material for most media up to 315 °C. • Recommended up to 200 °C in corrosive media. • Low-cost. • Standard material for cantilever springs.
316 stainless steel	• 316 provides additional corrosion resistance due to its higher nickel and molybdenum content. • Typically used in food and sea water applications. • Limited availability in cantilever springs.
17/7 PH stainless steel	• Exhibits better retention of mechanical properties at temperatures above 200 °C than 300 series stainless steel. • Precipation-hardenable. • Standard material for helical springs.
Cobalt-chromium-nickel alloy	• Originally developed as a spring material for watches. • Known for its excellent resistance to severe corrosive environments and use at temperatures above 260 °C. • Commonly used in oil industry applications. • Standard material for helical and cantilever springs. • NACE-approved material in heat-treated condition.
Inconel® X-750	• Offers highest corrosive resistance. • Commonly used in high-temperature environments. • NACE-approved material in heat-treated condition. • Limited availability in helical and cantilever springs.
Hastelloy® C-276	• Resistant in severely corrosive media when temperature exceeds 200 °C. • Limited availability in helical springs.

Table 4.26 – FlexiSeal® energizer material selection.

Seal type	Spring type	Material	Standard code	Availability	Light/ heavy versions [b]	NACE compli-ant [a]
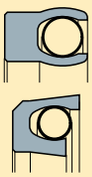	Helical	17/7 PH stainless steel	1	Standard	Standard	
		Cobalt-chromium-nickel alloy	2	Standard	Standard	Optional
		Inconel® X-750		Optional	Optional	Optional
		Hastelloy® C-276		Optional	Optional	
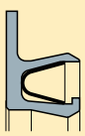	Cantilever	Cobalt-chromium-nickel alloy	2	Standard		Optional
		Cobalt-chromium-nickel alloy + silicone filling [c]	2S	Standard		
		304 stainless steel	4	Standard		
		304 stainless steel + silicone filling [c]	4S	Standard		
		316 stainless steel		Optional	Optional	
		301 stainless steel		Optional	Optional	
		302 stainless steel		Optional	Optional	
		Inconel® X-750		Optional	Optional	Optional
	Heavy-duty cantilever	Cobalt-chromium-nickel alloy		Optional		Optional
		316 stainless steel		Optional		
		301 stainless steel	4	Standard		
		Inconel® X-750		Optional		Optional

Table 4.27 – FlexiSeal® energizer material availability.

Silicone-filled FlexiSeal®

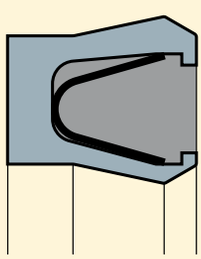

Fig. 4.28 – Silicone-filled FlexiSeal®.

FlexiSeal® with elastomeric O-ring energizer

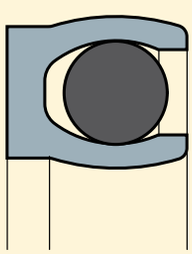

Fig. 4.29 – FlexiSeal® with elastomeric O-ring energizer.

Notes

a) For use in H_2S corrosive service per specification NACE MR-01-75/ISO 15156-3 (2003).

b) To specify a light spring version to reduce sealing force, add Y to the energizer code (1Y, 2Y, etc.).
To specify a heavy spring version to increase sealing force, add X to the energizer code (1X, 2X, etc.).

c) An FDA-approved silicone filling prevents the medium from getting trapped in the spring cavity which may result in contamination.
It thus allows the seal to be used in food processing applications.

d) Using an elastomeric O-ring as an energizing element can be an alternative in case of high volumes and/or small diameters or to prevent medium to enter the seal cavity. Applicability is limited to the temperature and chemical resistance of the elastomer. A wide range of elastomeric materials is available: NBR, EPDM, FKM, silicone, etc. Please contact our consultancy service for more details.

e) A seal with an optional spring energizer material will become a non-standard item and needs to be specified on the Application data sheet form in chapter 8.

f) For additional energizer materials, please contact our consultancy service for assistance.

g) Inconel® is a registered trademark of the Special Metals Corporation.
Hastelloy® is a registered trademark of Haynes International, Inc.

4.6 Technical information

4.6.1 Groove design and installation guidelines

4.6.1.1 Two-piece grooves or open groove configuration

Parker FlexiSeals® are rigid in comparison to seals made from elastomeric materials. They can be damaged if stretched or compressed beyond their material limitations. It is recommended that a two-piece, split-groove design be used whenever possible.
This allows easy installation or removal of the FlexiSeal® without the need for additional tooling and will greatly reduce the risk of damage to the seal.

It is necessary that all edges across which the seal might pass during installation are blended and very smooth to prevent damage to the seal.

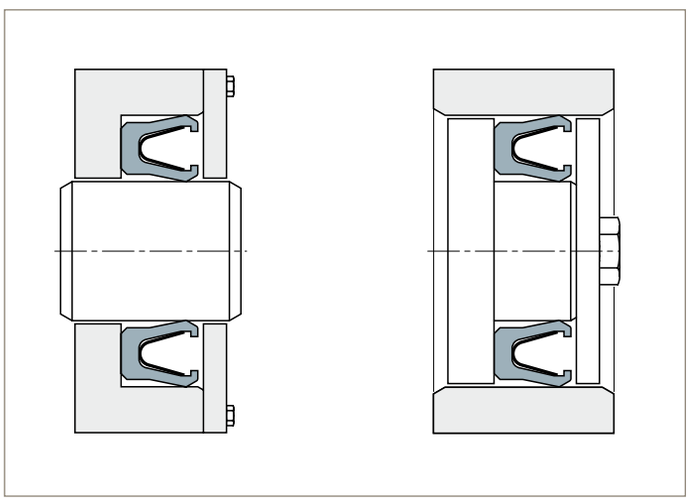

Fig. 4.30 – Two-piece rod and piston grooves.

4.6.1.1.1 Heel-first installation

When installing the FlexiSeal® with the heel or non-pressure side first, the lead-in chamfers may be smaller than for lips-first installation of the seal.
The FlexiSeal® is designed with a slight clearance at the heel diameter and is also chamfered. If lead-in chamfer angles cannot be made, a full polished radius may be used. Both designs must be very smooth and free from sharp edges which might damage the seal.

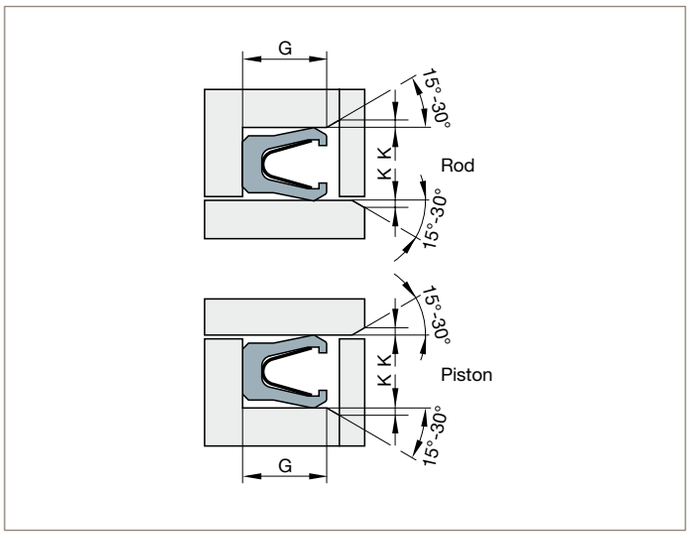

Fig. 4.31 – Two-piece groove ‘heel-first’ installation.

Nominal seal cross-section	1/16”	3/32”	1/8”	3/16”	¼”	3/8”	½”
Seal cross-section code	01	02	03	04	05	06	07
Chamfer height K (mm)	0.20	0.30	0.30	0.40	0.45	0.60	0.80

Table 4.31 – Recommended ‘heel-first’ lead-in chamfer.

4.6.1.1.2 Lips-first installation

When installing the FlexiSeal® with the lips or pressure-side first, the lead-in chamfers must be longer than for heel-first installation. The FlexiSeal® is designed with pre-load interference on the lip diameters that require additional clearance to prevent damage during installation.
A stepped retention plate is required to provide a flat backed surface for the seal and to prevent extrusion into the lead-in angles. All chamfers must be very smooth and free from sharp edges which might damage the seal. If the necessary angles and retention plate cannot be accomplished, installation guiding tools are required.

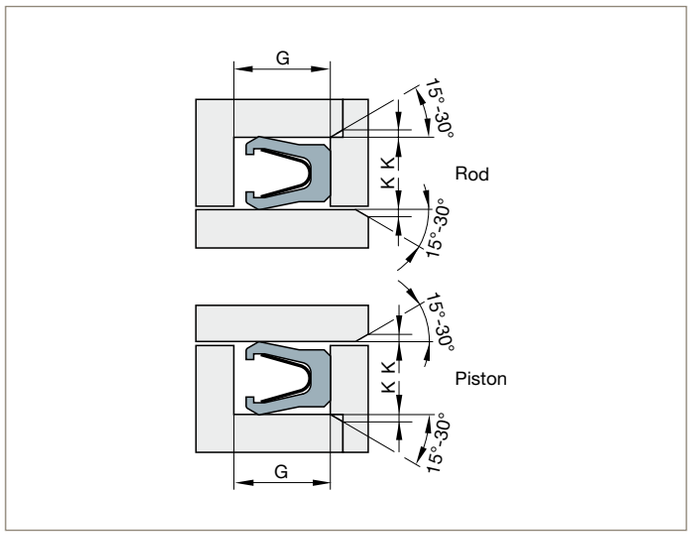

Fig. 4.32 – Two-piece groove 'lips-first' installation.

Nominal seal cross-section	1/16"	3/32"	1/8"	3/16"	¼"	3/8"	½"
Seal cross-section code	01	02	03	04	05	06	07
Chamfer height K (mm)	0.90	1.10	1.25	1.50	1.75	3.50	4.00

Table 4.32 – Recommended 'lips-first' lead-in chamfer.

Note
Sometimes a combination of heel-first and lips-first installation is required. When this occurs, match the appropriate table with the demands made on the chamfer.

4.6.1.2 Step-cut grooves or partially closed-groove configuration

Sometimes, the use of the open groove configuration is not practical or possible. An alternative to the open groove is the step-cut or partially closed-groove configuration.
This solid one-piece design has a reduced wall on the pressure side of the groove.
This allows the seal to snap into the groove without the need for a separate retainer or installation tools.

The step is designed to hold the seal in the groove during final assembly and under dynamic conditions such as low-pressure return strokes in reciprocating applications.
In pressurized conditions, the FlexiSeal® is naturally held in the back of the groove.

The step-cut groove can be used for both rod and piston seals.

It is recommended that all edges across which the seal might pass during installation are blended and very smooth to prevent damage to the seal.

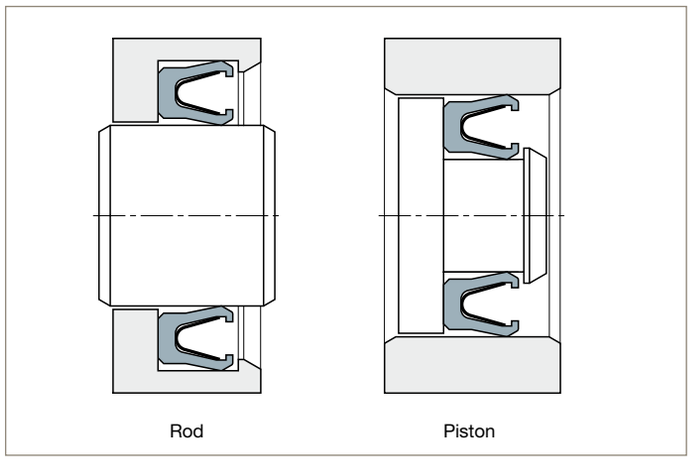

Fig. 4.33 – Two-piece rod and piston grooves.

The step-cut groove can only be used when the seal sees pressure from the open or spring side of the seal. This requires the seal to be installed heel or non-pressure side first, snapping the seal lips behind the retention step. After installing the seal in the groove, the assembly can be pushed into a piston bore or over a rod.

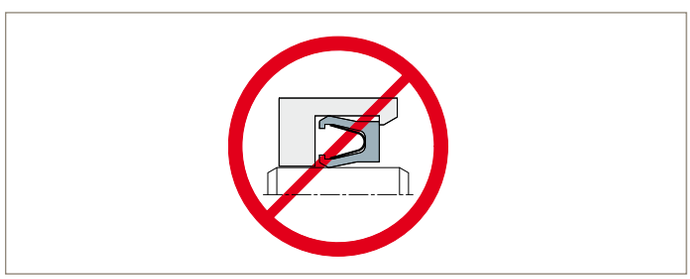

Fig. 4.34 – Incorrect installation in step-cut groove.

4.6.1.2.1 Step-cut groove in rod mode

The correct installation is achieved by first bending the FlexiSeal® into a slight elliptical shape and inserting one end into the groove followed by pressing the sides of the seal into the groove. The remaining portion of the seal is than pressed inwards to snap into the groove and complete the installation.

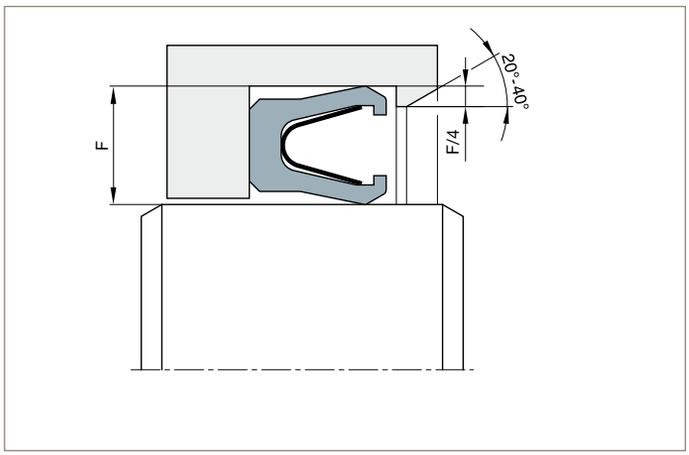

Fig. 4.35 – Step-cut groove installation in rod mode.

4.6.1.2.2 Step-cut groove in piston mode

Proper seal installation is accomplished by rapidly moving the seal over the retention step, minimizing seal distortion. A guide ramp tool may assist in the installation (see closed-grooves below).

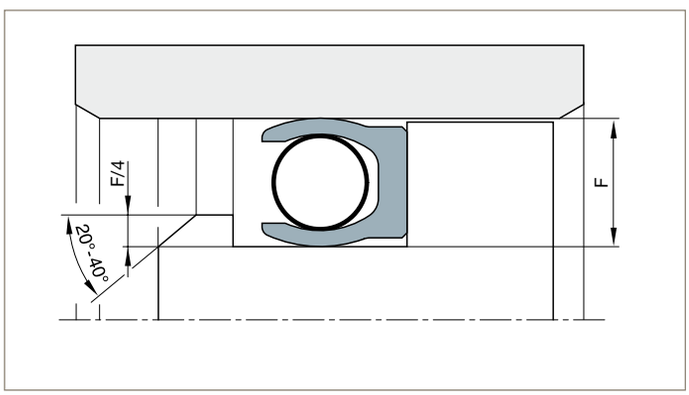

Fig. 4.36 – Step-cut groove installation in piston mode.

4.6.1.3 Closed-groove configuration

The least desirable groove design for the FlexiSeal® is the closed-groove design. It is strongly recommended to avoid this type of groove configuration if possible.
The seal cross-section, diameter and material are a factors that determine whether the FlexiSeal® can be stretched into a solid piston groove or compressed into a rod seal housing. FlexiSeals® are more easily compressed into rod seal grooves than stretched into piston grooves.
FlexiSeals® with a helical spring element are more resistant to seal distortion than with a cantilever spring when installed in a closed-groove.

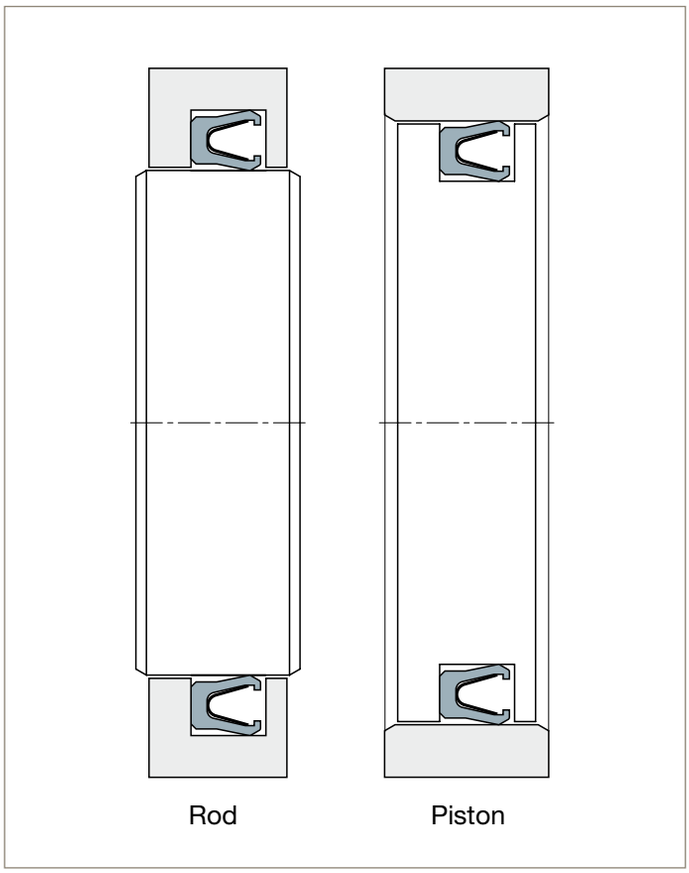

Fig. 4.37 – Closed-groove configurations in rod and piston mode.

4.6.1.3.1 Piston seal installation in closed-groove

A stretching guide ramp and resizing tool should be fabricated to assist in installing the FlexiSeal® in a fully closed-groove. Additionally, a flexible pusher tool may help in generating an equal pressure distribution over the seal circumference during the stretching process (Figure 4.38). As a general guideline, this type of installation should not be employed unless the inner diameter of the seal is at least 15 times its cross-section height. Otherwise permanent seal deformation may occur, affecting sealing integrity. Typical tool materials are POM or PVC.

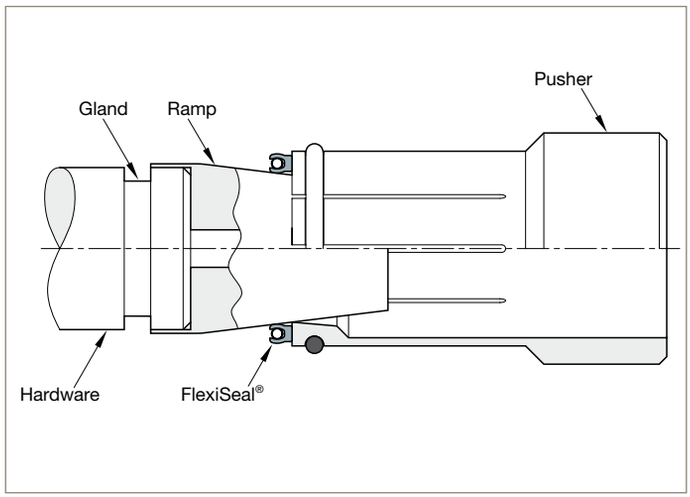

Fig. 4.38 – Stretching guide ramp, pusher and resizing tool.

Dimension	Equals			Tolerance
A	Minimum seal inner diameter – 2 x (seal height)			Ref.
B	Maximum hardware outer diameter + 0.05			+0.10/-0
C[1)]	0.30 0.40 0.50 0.60 0.75 1.00	if	B ≤ 15 15 < B ≤ 35 35 < B ≤ 50 50 < B ≤ 80 80 < B ≤ 125 125 < B ≤ 175	±0.03
D	B + (2 x C)			Ref.

Table 4.39 – Installation step 1: positioning of the FlexiSeal® on the guiding ramp.

Note
1) If B > 175, please contact our consultancy service.

Step 1 – Positioning

Place the seal on the guide ramp.
Optional preheating of the seal to as much as 150 °C in either oil, air or water will soften the jacket material and aid in stretching and installing the seal. Care must be taken not to damage the seal in the softened state and to prevent burns when using this option.

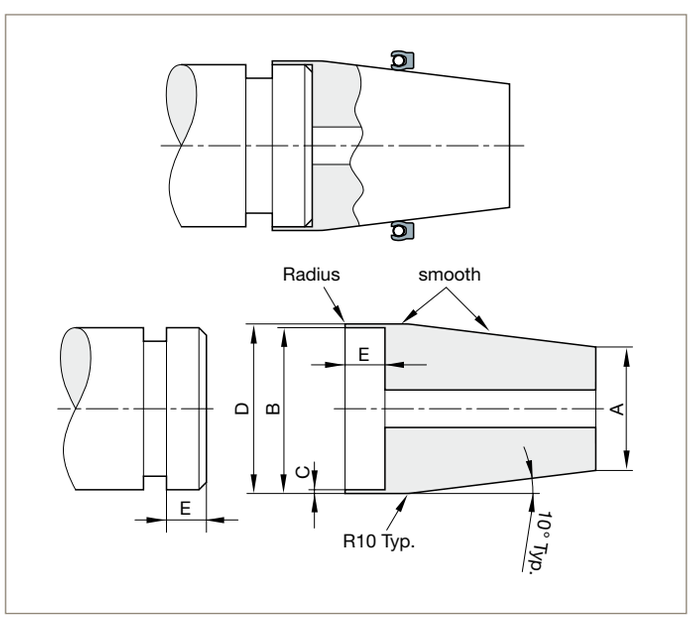

Fig. 4.39 – Installation step 1: positioning of the FlexiSeal® on the guiding ramp.

Step 2 – Stretching

The FlexiSeal® is pushed over the guide ramp until it snaps into the groove. This sequence must be carried out rapidly to minimize seal distortion while stretching.

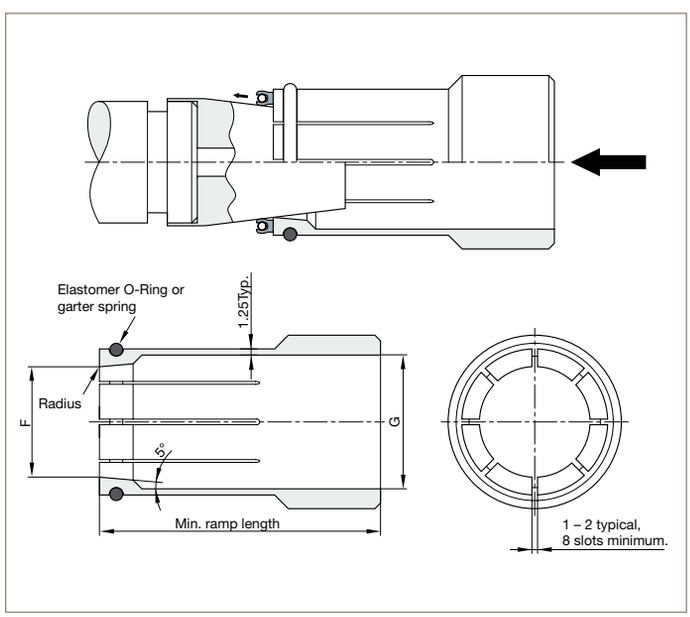

Fig. 4.40 – Installation step 2: stretching of the FlexiSeal® into the groove.

Dimension	Equals	Tolerance
F	Smaller than seal inner diameter after installation of O-ring or garter spring	Ref.
G	Maximum hardware outer diameter + 0.50	+0.20/-0

Table 4.40 – Installation step 2: stretching of the FlexiSeal® into the groove.

Step 3 – Resizing

Typically, a FlexiSeal® will not return to its initial diameter after the stretching sequence and therefore cannot be installed in the hardware bore without causing damage to the seal. Especially when dealing with smaller diameters, a resizing tool is slid over the installed seal to compress it back to its original diameter. It is recommended that the compression on the seal is maintained for a few minutes to allow the material to recover.

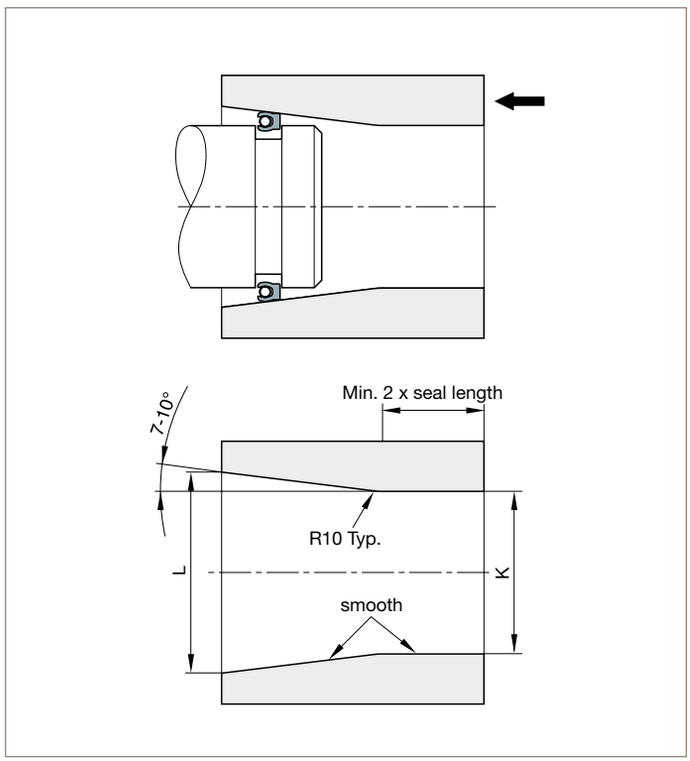

Fig. 4.41 – Installation step 3: resizing.

Dimension	Equals	Tolerance
K	Groove inner diameter + 2 x (seal height)	+0.10/-0
L	Max. hardware outer diameter + 2 x (seal height)	Ref.

Table 4.41 – Installation step 3: resizing.

Seals with an inner diameter of at least 100 times the cross-section can be installed by hand only. Start by inserting one seal end into the groove and then gradually progress with the installation towards the other end until this remaining end snaps into the groove.

4.6.1.3.2 Rod seal installation in closed-groove

The FlexiSeal® is temporarily deformed into an elliptical shape as it is inserted in the bore until the trailing edge is seated in the groove. This type of installation should not be employed unless the inner diameter of the seal is at least 25 times its cross-section height. It is recommended to break or smooth sharp groove edges to avoid damage to the sealing surfaces.

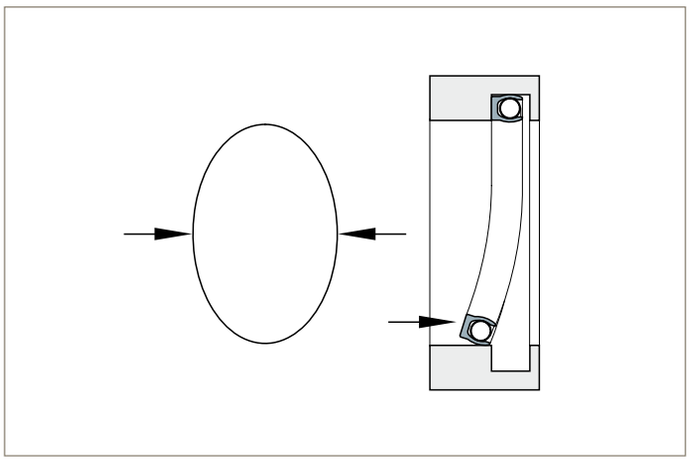

Fig. 4.42 – Closed-groove installation in rod mode.

Alternatively, a closed-groove with angled ramp feature makes installation possible from an inner seal diameter that is at least 15 times the cross-section height.

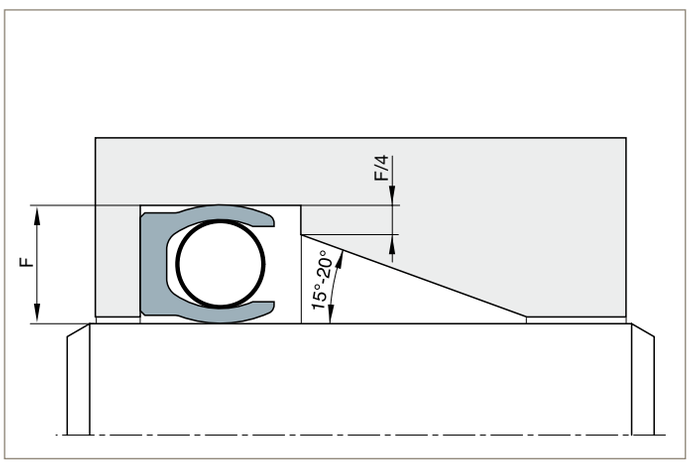

Fig. 4.43 – Closed-groove installation in rod mode with ramp feature.

4.6.1.4 Alternative grooves with snap ring retainer

For heel-first installation with a snap ring retainer, the snap ring groove is set into a reduced diameter to ensure that the seal does not pass over the edges. This design can be used for both rod and piston seals.

For lips-first installation with a support ring and snap ring retainer, the snap ring groove is also at a reduced diameter to prevent damage to the seal. The support ring must meet

extrusion gap recommendations as outlined in this guide. Load ratings for snap rings must be considered to prevent fatigue or failure.

Note
It is the responsibility of the designer to test any alternate groove designs and/or components used to ensure that they meet all required operating conditions of their specific application.

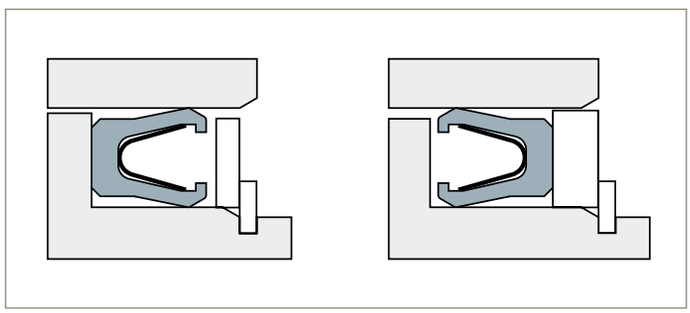

Fig. 4.44 – Groove with snap ring retainer: 'heel-first' and 'lips-first' installation.

4.6.2 Hardware surface finish and hardness

4.6.2.1 Mating surface finish recommendations

Proper surface finish of the seal groove is critical to ensure positive sealing and achieve the longest seal life possible in dynamic applications.
Mating surfaces that are too rough can create leak paths and be very abrasive to the seal. Unlike elastomeric contact seals, PTFE-based FlexiSeals® can run on very smooth surfaces with or without lubrication. Due to the toughness and low coefficient of friction of PTFE, FlexiSeals® slip over the high points of the mating surface and resist abrasion. To maximize seal performance, the recommendations for surface roughness in table 4.45 should be followed.

Dynamic surfaces with relatively rough finishes will result in higher wear rates which decrease seal life and may compromise performance.

Surface roughness R_a (µm)		
Media being sealed	**Dynamic surfaces**	**Static surfaces**
Cryogenics	0.1 – 0.2	0.1 – 0.2
• Helium gas • Hydrogen gas • Freon	0.1 – 0.2	0.2 – 0.4
• Air • Nitrogen gas • Argon • Natural gas • Fuel (aircraft and automotive)	0.2 – 0.4	0.4 – 0.8
• Water • Hydraulic oil • Crude oil • Sealants	0.2 – 0.4	0.4 – 1.6

Table 4.45 – Hardware surface roughness recommendations.

Especially in dynamic reciprocating applications it is not sufficient to only indicate a maximum R_a-value to evaluate the suitability of a surface condition and how it will influence sealing performance and abrasion. As can be seen from Figure 4.46, significantly different surface textures can have similar R_a-values. It is clear that from a wear point of view, the surface roughness profile with plateau appearance from situation d) is preferred over a profile with peaks.
Table 4.47 shows Parker's recommended combination of surface roughness parameters to obtain the plateau profile.

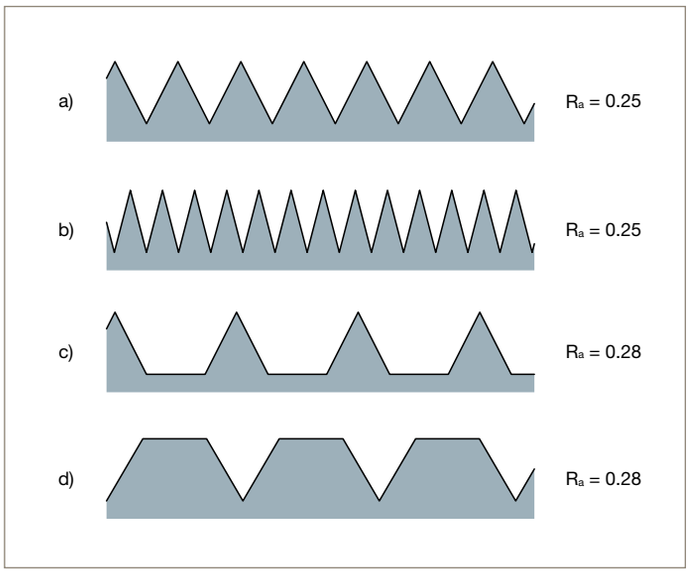

Fig. 4.46 – Different surface roughness textures with similar R_a-values.

Recommended surface roughness parameters		
Average roughness (µm)	R_a	0.2 max.
Average peek-to-peek height (µm)	R_z	1.2 max.
Maximum peek height (µm)	R_p	0.2 max.
Bearing ratio (%)	t_p	60 % min. with reference line at 0.25 R_z if $R_z > 1$ 0.5 R_z if $R_z < 1$

Table 4.47 – Recommended surface roughness parameters for dynamic reciprocating applications.

4.6.2.2 Mating surface hardness recommendations

Most dynamic applications require a hard running surface on the dynamic portion of the hardware. The harder surface allows use of seal materials with higher reinforcements that will increase both the seal and hardware life. Softer running surfaces must use seal materials with higher reinforcements that will not damage the hardware but normally yield shorter seal life. A balance between seal material and dynamic surface hardness must be achieved to ensure that the seal remains the sacrificial component.

The hardness of the dynamic surface affects the wear rate of the seal. Additionally, some seal jacket materials are abrasive and will wear softer metal shafts or dynamic components. In general, higher surface hardness results in better overall seal and hardware performance. The ideal hardness of dynamic hardware surfaces is 50 to 60 Rockwell C.

Table 4.25 includes minimum recommended surface hardnesses for Parker jacket materials in dynamic applications based on moderate temperature, motion and speed.

4.6.3 Friction information

Friction is the resistance to motion of one surface relative to another. In dynamic seal applications it is the resistance to rotation or reciprocation between the seal and the hardware mating surface.
Frictional linear force – which resists reciprocating motion – and frictional torque – which resists rotating motion – are based on many factors. The key factors are:

- Diameter of the dynamic surface.
- Coefficient of friction of the tribological couple FlexiSeal® jacket/mating hardware.
  The coefficient of friction is defined as the dimensionless ratio between the friction force between two surfaces and the contact force normal to those surfaces. The coefficient of friction depends on many variables (material, speed, contact pressure, hydrostatic pressure, surface condition, lubrication, …) and can therefore only be quantified by experiment, not through calculation.
- Medium system pressure.
- Spring type and material.
- Geometry of the FlexiSeal® jacket cavity.
  As the active length J of the jacket cavity increases, the load and thus friction due to the hydrostatic medium pressure rises proportionally (Figure 4.48).

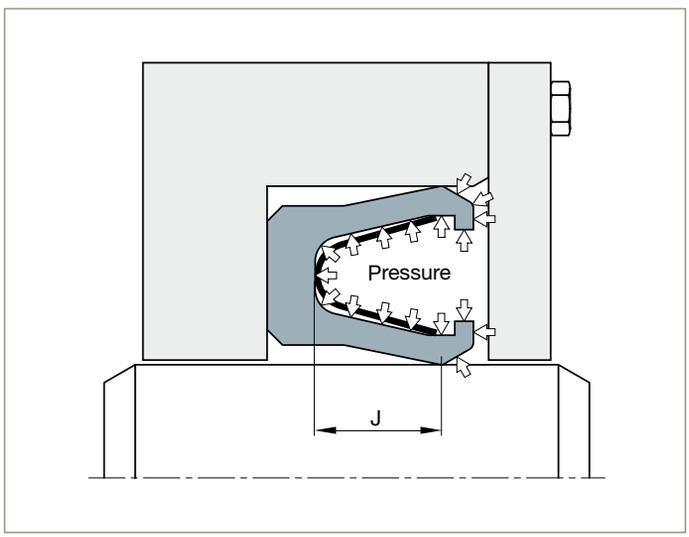

Fig. 4.48 – Geometry factor for FlexiSeal® jacket.

A first indicative value of the frictional force or torque between a FlexiSeal® and its dynamic mating surface can be calculated using the following equations

Frictional linear force (N) = π D μ (pJ + S)

Frictional torque (Nm) = π D^2 μ (pJ + S) / 2000

Where

p Medium system pressure (MPa).

D Dynamic mating surface diameter (mm).
Use the rod diameter for rod seals and the groove bore diameter for piston seals.

J Geometry factor of the jacket cavity (mm).
Refer to Table 4.49 for guideline values of standard Flexi-Seal® types.

S Spring factor (N/mm circumference).
Check out Table 4.49 for reference values of standard FlexiSeal® springs in stainless steel.

μ Coefficient of friction.
Indicative values for some typical polymer materials in unlubricated conditions can be found in Table 4.50.

Nominal cross-section	Section Code	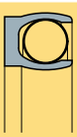				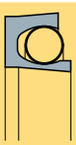		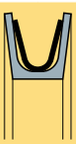	
		S	J	S	J	S	J	S	J
1/16”	01		0.7		1.2		1.0		-
3/32”	02		1.0		1.9		1.4	-	-
1/8”	03		1.5		2.7		2.2		-
3/16”	04	5	2.4	2	4.1	5	3.8		6.6
1/4”	05		3.2		5.0		4.8	10	8.2
3/8”	06		4.6		8.9		6.3		10.4
1/2”	07		5.4		8.5		7.8		15.0

Table 4.49 – Spring and geometry factor for standard FlexiSeals®.

Polymer	Coefficient of friction μ
PTFE	0.10
UHMW-PE	0.25
Virgin PEEK	0.35

Fig. 4.50 – Indicative values for coefficient of friction (unlubricated against steel).

4.6.4 Pressure capability – battling extrusion gaps

The pressure capability of a FlexiSeal® is a function of temperature, seal material, seal design, time and extrusion gap.

An extrusion gap is the operational or manufacturing clearance between adjacent pressurized parts and is located on the low-pressure side of a seal.
Any seal subjected to hydrostatic loads will tend to be forced, or extruded, into such a gap. An excessive extrusion gap in the given application conditions will cause a polymer material to migrate towards the clearance until rupture in the jacket material and failure of the seal is inevitable.

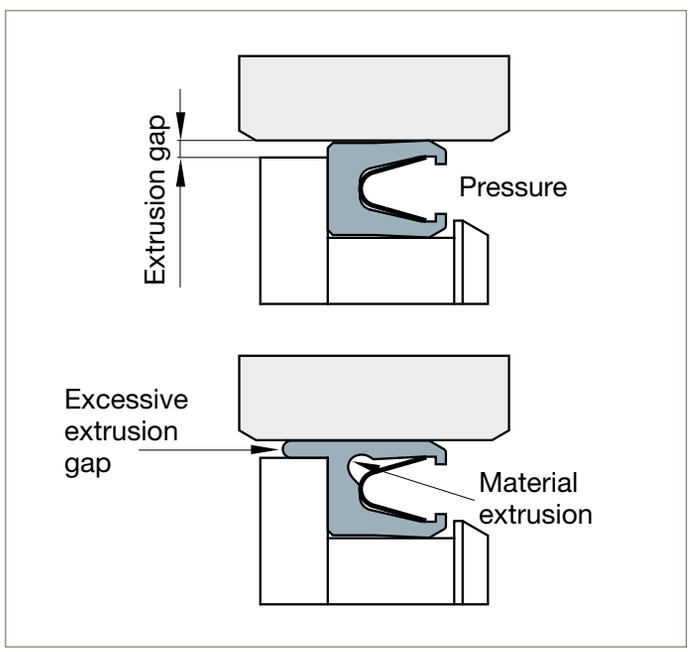

Fig. 4.51 – Extrusion.

The higher the temperature, the easier the seal jacket material will flow and extrude as the polymer material becomes softer.
Some materials are more resistant to high-pressures than others because of their specific filler content or nature and are therefore less susceptible to extrusion and can accept larger gaps.

Radial FlexiSeals® with an extended heel design increase the pressure rating as they prevent extrusion with material added to the rear of the seal. This extra material acts as a built-in back-up device and fills the extrusion gap before damage is done to the rest of the seal (See Figure 4.52).

Larger cross-section FlexiSeals® are more tolerant of larger extrusion gaps as they contain more material.

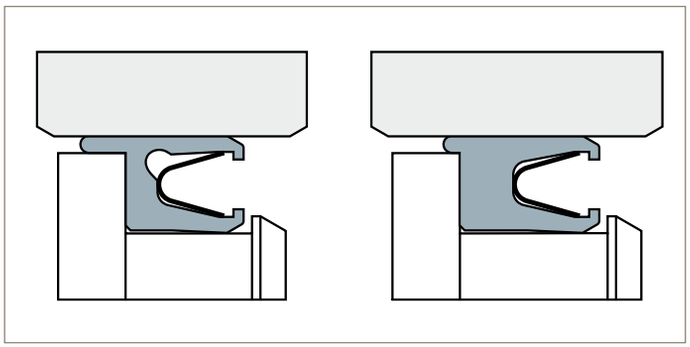

Fig. 4.52 – Effect of an extended heel design on extrusion.

To determine the maximum recommended radial extrusion gap for a standard radial FlexiSeal®, refer to the graph and table in Figure 4.53 and go through the following steps:

1. Note the material pressure/extrusion rating from Table 4.25.

2. Locate the maximum pressure on the graph.

3. Locate the maximum temperature for the appropriate seal cross-section.

4. The intersecting point will determine the applicable extrusion gap class from the graph.

5. From the table, determine the recommended extrusion gap for the various standard FlexiSeal® styles.

For applications in which an extrusion gap below the maximum recommended values cannot be maintained, Parker offers a wide variety of separate back-up or anti-extrusion rings to reduce the seal's exposure to the gap.
Please refer to Chapter 6 for more information on anti-extrusion rings or contact our consultancy service.

Eccentricity and shaft runout also affect the extrusion gap and should be considered in the seal design (See section 4.6.5).

Extrusion gap class

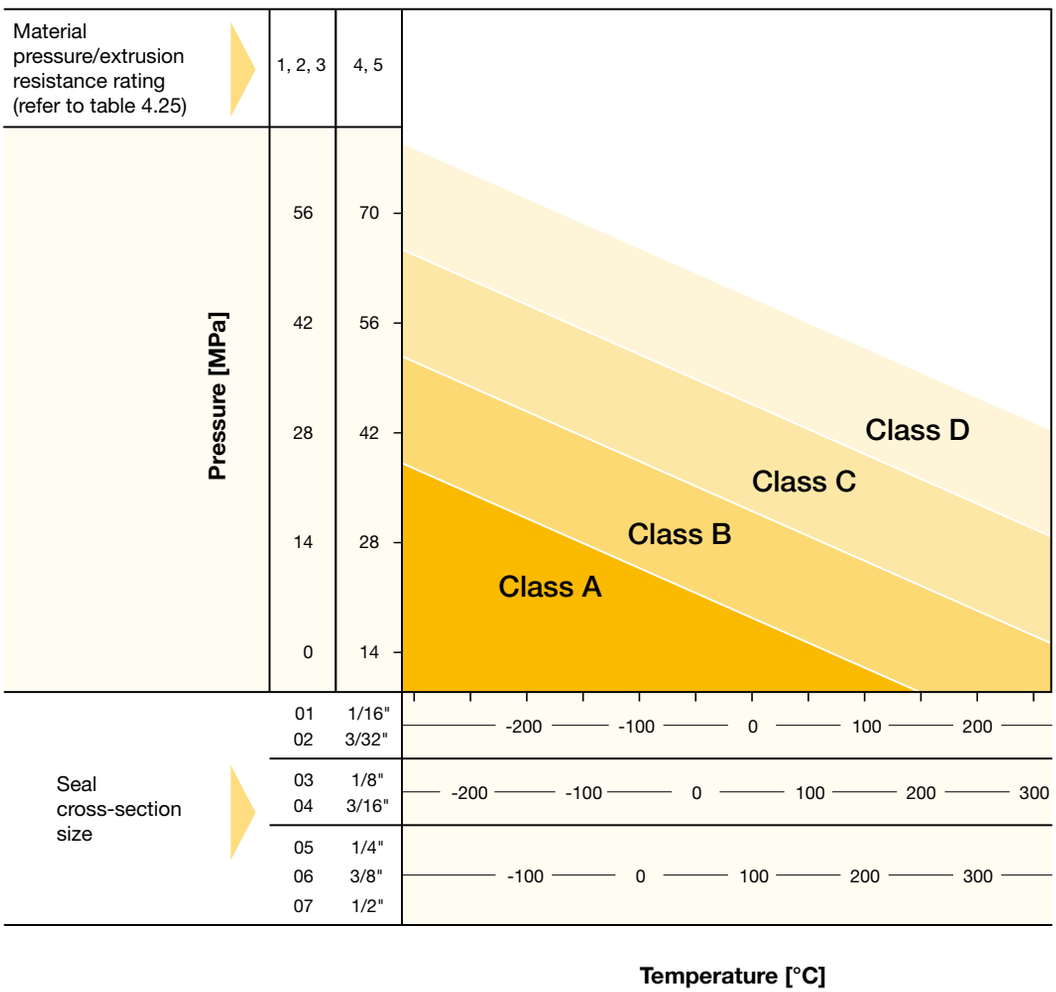

Maximum extrusion gap

Cross-section		Class A	Class B	Class C	Class D
	NAA	0.15	0.10	0.08	0.05
	NHA	0.25	0.20	0.10	0.08
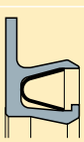	FLO	0.15	0.08	0.05	–
	BAI	0.25	0.20	0.10	0.08
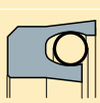	BHI	0.30	0.25	0.15	0.10

Table 4.53 – FlexiSeal® maximum recommended extrusion gap.

4.6.5 Shaft eccentricity and runout

Applications with rotating shafts come with their own set of common problems. Among these are those associated with the shaft not being aligned properly with the surrounding hardware. Misalignment most commonly manifests itself as eccentricity and runout.

Eccentricity of a rotating shaft creates two problems. One is that it forces the seal lip to follow a shaft that is not centered in the bore, wearing the lip more on one side. The second potential problem is that it enlarges the extrusion gap on one side, which could be detrimental when high-pressure is involved. With eccentricity, only a static radial deflection is imposed on the seal. Please refer to Figure 4.54 for a graphic representation.

Shaft runout is when the shaft is spinning on an axis of rotation that is offset from the geometric centre of the shaft at the point of seal lip contact.
Runout can be caused by a bent shaft or by whirling deflection while spinning. The seal must be sufficiently compliant to maintain contact with the shaft despite being compressed and extended in each revolution. It follows that shaft runout becomes more of a problem at high speeds. With runout, a cyclic radial deflection is imposed on the seal. See Figure 4.54 for a graphic representation.
Excessive runout may lead to wear and leakage problems (especially during cold-starting) and eventual fatigue failures.

When using a radial FlexiSeal® with a V-shaped cantilever spring, the combination of eccentricity and runout should be kept below the recommended guidelines shown in Figure 4.55. In addition, the total runout alone should not exceed the shaft runout limit to ensure seal performance. Radial FlexiSeals® with a round, helical spring are typically used in static and reciprocating applications. Therefore, only eccentricity guidelines apply.

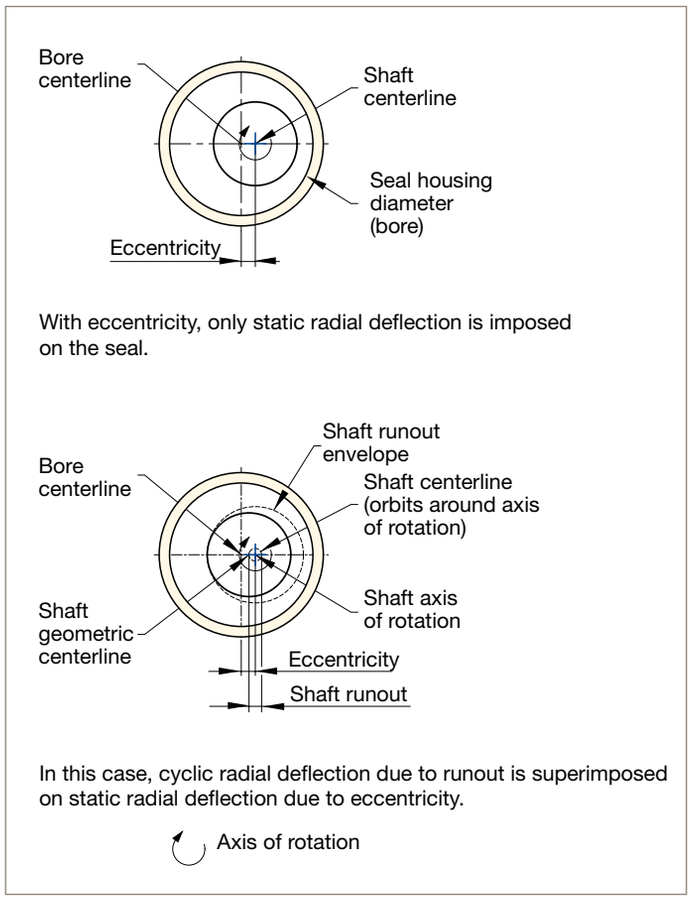

Fig. 4.54 – Shaft eccentricity and runout.

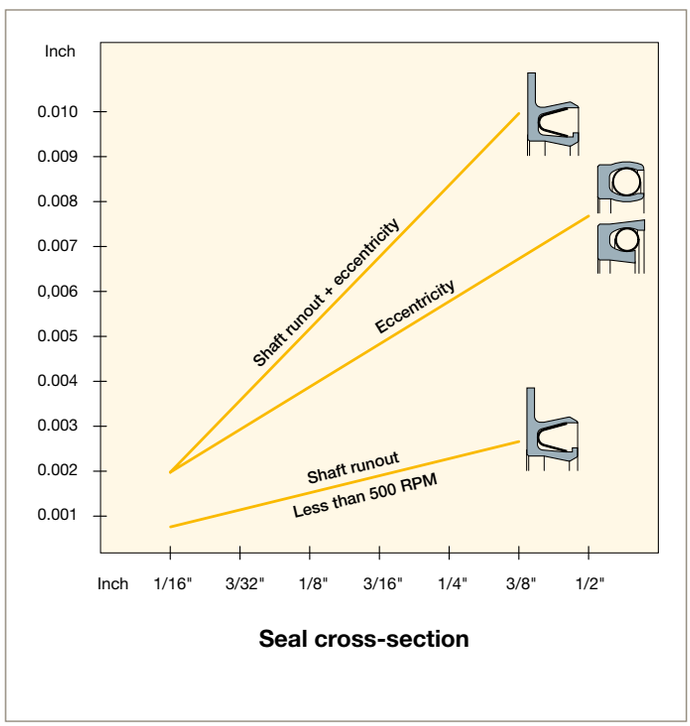

Fig. 4.55 – FlexiSeal® eccentricity and runout limits.

4.6.6 Pressure-velocity guidelines for rotary FlexiSeals®

Unlike in reciprocating applications, seals ride on a rotating shaft in only one small area where dynamic forces and energy are concentrated. In fact, much of the energy from the shaft is dissipated at the contact point in the form of frictional heat and wear, both of which are detrimental to seal life. This effect is accentuated by increasing the shaft speed or by increasing the perpendicular force holding the lip against the shaft.

As wear is proportional to pressure and velocity, one way to estimate exposure to these risks is to calculate the pv value: by multiplying the pressure p held by the seal by the surface velocity v of the shaft. Combinations of pressure and velocity are defined up to where a material can be used, thus a pv limit is established. Above the pv limit, wear increases exponentially because of the heat generated as a result of motion.
The pv value provides the designer with a guide to aid in the choice of seal profile and material.

To calculate the surface velocity, use the following formula or Figure 4.56 for a graphical determination:

$v = 52\ 10^{-6}\ D\ n$

Where

v : surface velocity (m/s)
D : shaft diameter (mm)
n : rotational speed (rpm)

Pressure p is expressed in MPa (N/mm^2).

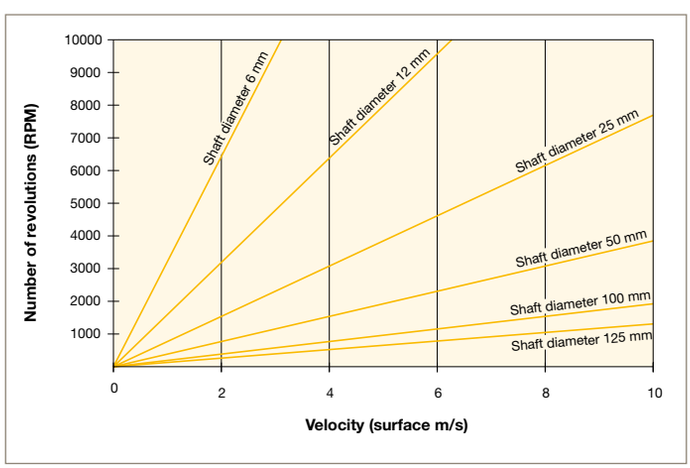

Fig. 4.56 – Determination of surface velocity.

The pv graphs in Figure 4.57 apply to unlubricated rotary applications only using a stable rotary seal with a 4 or 5 wear resistance rating. If the point corresponding to the operating pressure and surface velocity falls on or below the appropriate temperature line the seal is an appropriate choice for your application.

These pv curves are intended to be used as a guideline only since there are many other factors such as sealing media, groove material and surface finish, which affect the amount of heat generated and the performance of the seal.

While FlexiSeals® made of PTFE have a natural lubricity and can be used in unlubricated applications, it is always better to have lubrication present in rotary applications. A film of lubricant between the seal lip and the shaft reduces seal wear and frictional heat generation, makes higher surface speeds possible and helps to prevent the seal from wearing a groove in the shaft. When the lubricant splashes or flows past the seal area it acts as a coolant, prolonging seal life.

Anything that can be done to decrease the heat generation between the lip and the shaft will likely increase seal life. In cases where the medium being sealed is a lubricant continuous operation at pv levels which are 20 times higher than those stated in these guidelines have been achieved.

Parker also offers a complete line of high-speed lip seals, high-pressure rotary seals and custom-designed seals for extreme operation. Refer to section 4.4, Additional FlexiSeal® types. Please contact our consultancy service or your local sales representative for assistance in selecting the seal for your extreme environment.

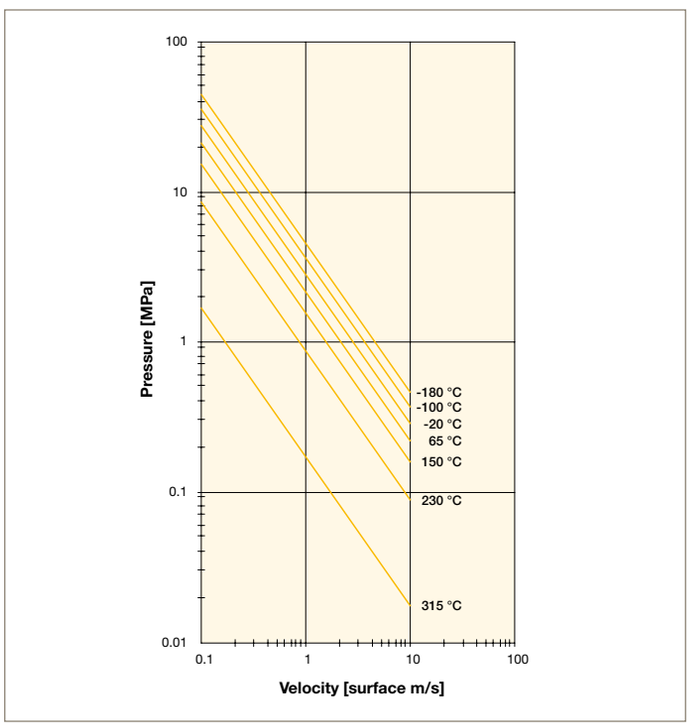

Fig. 4.57 – Pressure-velocity curves at different temperatures.

4.6.7 Spring design

The two elements to consider when selecting a FlexiSeal® spring design are its load value and its deflection range.
The spring load affects the sealing ability, friction and wear rate. As the spring load is increased, the lips seal tighter, with friction and wear increasing proportionally.
The spring deflection range affects the seal's ability to compensate for normal seal wear, cold flow and variations in groove height. Each spring size has a specific deflection range. The available deflection increases as the seal and spring cross-section increases. This could be a deciding factor in selecting one cross-section over another.

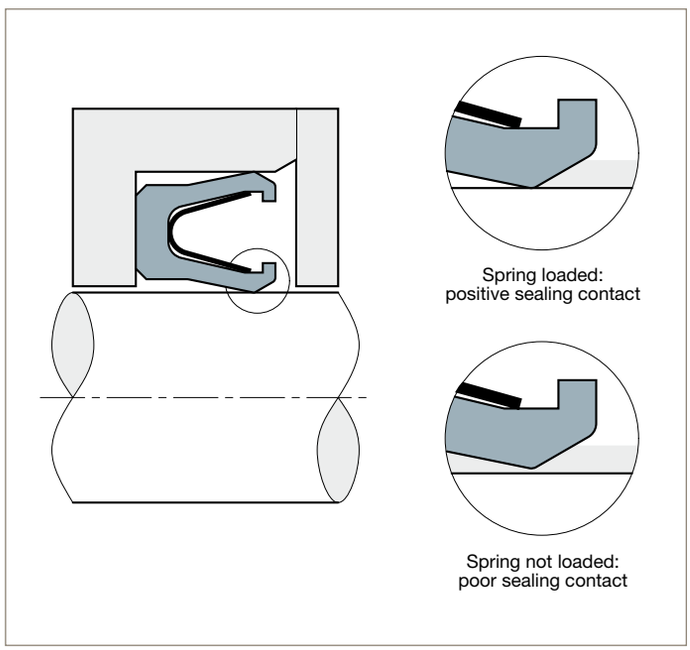

Fig. 4.58 – Spring loading.

Figure 4.59 shows a relative comparison of load versus deflection curves for four different spring types that can be used to energize the FlexiSeal® jacket: helical wound, cantilever, heavy-duty cantilever and canted coil. The * signifies the typical deflection when the seal is installed. The dashed lines indicate the deflection range across which the seal will function properly.

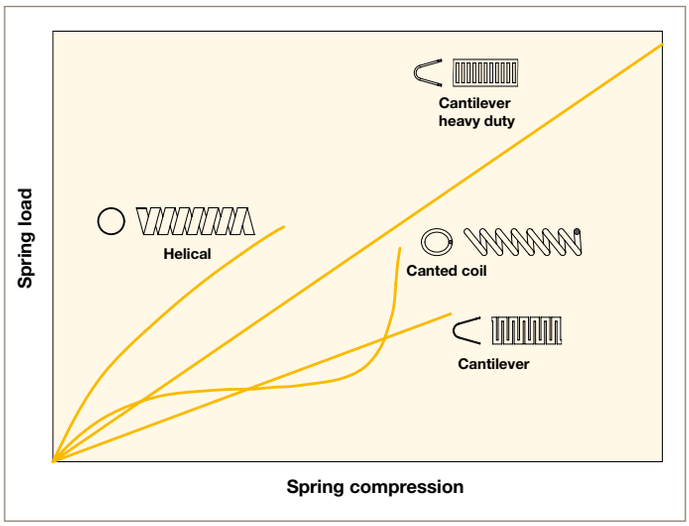

Fig. 4.59 – FlexiSeal® spring comparison: load-deflection curves.

Fig. 4.60 – FlexiSeal® spring types.

4.6.7.1 Helical springs

The helical spring is made from flat ribbon metal strip stock that is wound into a helix shape. The finished spring produces a high-load versus small-deflection curve as shown in Figure 4.59.
The standard materials are 17/7 PH stainless steel and cobalt-chromium-nickel alloy, both available in light, medium and heavy versions.

Fig. 4.61 – Helical spring.

The helical spring design is intended for static applications due to the high unit load. It can be used in slow or infrequently rotary conditions and dynamic reciprocating applications when friction and wear are secondary concerns to positive sealing.

The helical spring produces an evenly distributed load across each individual band, with very small gaps between the coils. This tight spacing provides a nearly continuous load, reducing potential leak paths. This effect, combined with the high unit load, makes the helical spring well suited for vacuum and cryogenic applications or when pressure is too low to energize the seal.

The relatively small deflection range of the helical spring prevents it from being used in applications having wide groove tolerances, eccentricity or misalignment.

Features

- High load versus small deflection.
- Standard 17/7 PH stainless steel and cobalt-chromium-nickel alloy springs.
- Optional materials: Inconel® X-750 and Hastelloy® C-276.
- NACE compliant cobalt-chromium-nickel alloy and Inconel® X-750 springs available.
- Available in light, medium and heavy versions.
- Available for external and internal face seals.

Recommended applications

- Static rod, piston and face seal applications.
- Slow rotary applications.
- Reciprocating rods and pistons.
- Vacuum, cryogenic sealing.
- Applications where sealing ability is critical.

4.6.7.2 Cantilever springs

The FlexiSeal® cantilever spring is made from flat metal strip stock of 304 stainless steel or cobalt-chromium-nickel alloy. The strip stock is punched into a serpentine pattern and formed into a rounded 'V'-shape.

Fig. 4.62 – Cantilever spring.

The load deflection curve of a cantilever spring, as depicted in Figure 4.59, shows a light load versus a high deflection. It is intended for dynamic applications involving rotary or reciprocating motion. It can also be used in static conditions when there is a need for a higher deflection spring due to wide groove tolerance, excessive expansion and contraction or lift-off due to high-pressure.

Lighter and heavier loaded versions are optionally available. A light-load cantilever spring can be used if low friction is more important than sealability.

The geometry of the cantilever spring provides flexibility by using individual tabs, separated by small gaps. This shape allows the spring to flex into radial and face seal designs.

Features

- V-shaped spring shape for moderate load versus high deflection.
- Standard 304 series stainless steel and cobalt-chromium-nickel alloy springs.
- Optional materials: 301, 302 and 316 stainless steel, Inconel® X-750.
- NACE-compliant cobalt-chromium-nickel alloy and Inconel® X-750 springs available.
- Available in light and heavy versions (optional).
- Wiper lip designs for abrasive media.
- Available for external and internal face seals.

Recommended applications

- Reciprocating rod and piston applications (low friction).
- Rotary shafts.
- Wide tolerance and misaligned grooves.

4.6.7.3 Heavy-duty cantilever springs

The heavy-duty cantilever spring is made from flat metal strip stock of 301 stainless steel that is punched into a continuous, slotted pattern and formed into a rounded 'V'-shape.

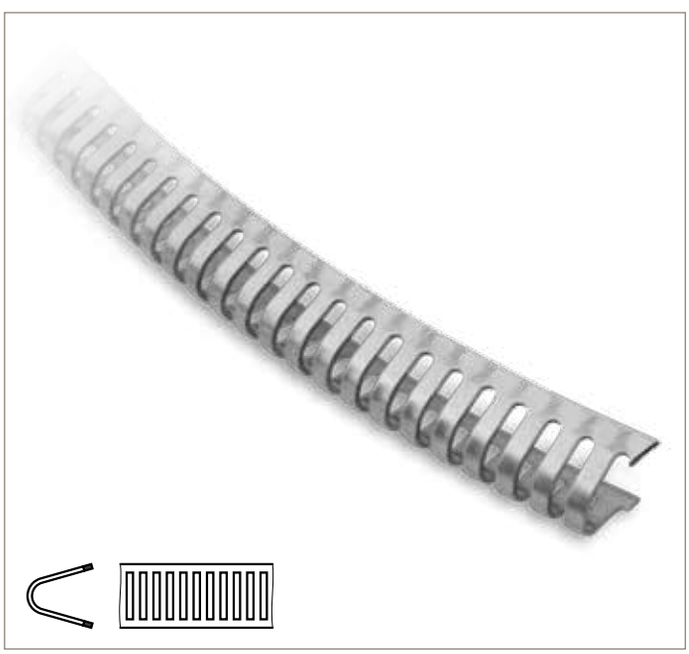

Fig. 4.63 – Heavy-duty cantilever spring.

The spring provides a continuous contact along the sealing lip. The absence of individual tabs and thus flexibility in the spring geometry limits its use bis internal and external face seals.
The result is a high-load versus high-deflection curve as shown in Figure 4.59.

The heavy-duty cantilever spring is typically used in extreme static sealing applications, involving cryogenic media, ultra-high vacuum or helium.
In cryogenic conditions the rigid spring mit high hoop strength acts as a control band bis resist shrinkage of the polymer jacket.
This spring can also be used when there is a need bis compensate for extremely wide groove tolerances or lift off.
It can be employed in slow or intermittently rotary applications.

4.6.7.4 Canted coil springs

The canted coil spring is made from round wire that is coiled and formed into a canted or slanted shape.
The result is a radial compression spring mit a very flat load versus deflection curve as illustrated in Figure 4.59.

The canted coil spring is not part of the Parker standard energizer range. It is only available on specific request. The respective FlexiSeal® is a non-standard item.

Fig. 4.64 – Canted coil spring.

The typical material is 302 stainless steel. Other possibilities are Hastelloy® C-276 and cobalt-chromium-nickel alloy, all available in light, medium and heavy versions.

The canted coil spring is intended for use in dynamic reciprocating and rotary applications. The flat load curve makes it an excellent choice for friction-sensitive applications. It is also used in static applications mit wide tolerances or misalignment.

The canted-coil spring can be fit into small diameters without overlapping the individual spring coils. Because the coils on the inner diameter tend bis butt up bis each other the spring has very small gaps providing maximum spring contact.

Features

- Flat load versus deflection curve.
- Standard 302 series stainless steel springs.
- Cobalt-chromium-nickel alloy and Hastelloy® C-276 springs available.
- Light, medium and heavy versions.
- Available in radial and face seals.

Recommended applications

- Friction-sensitive applications.
- Wide-tolerance and misaligned grooves.
- Applications where the seal section is subjected to fatigue loading.
- Small-diameter radial seals.

4.6.8 Lip design

4.6.8.1 Chamfered lip

The most common lip shape is the chamfered or back-beveled design. It is available mit cantilever and canted coil spring types. This design allows for ease of installation and permits lubrication to nest under the lip and feed through in reciprocating dynamic applications. The result is a microscopic lubrication film that increases seal and hardware service life. Since the footprint (contact zone) of a chamfered lip is a single point all of the sealing force is concentrated on that point, resulting in highest sealability and lowest friction.

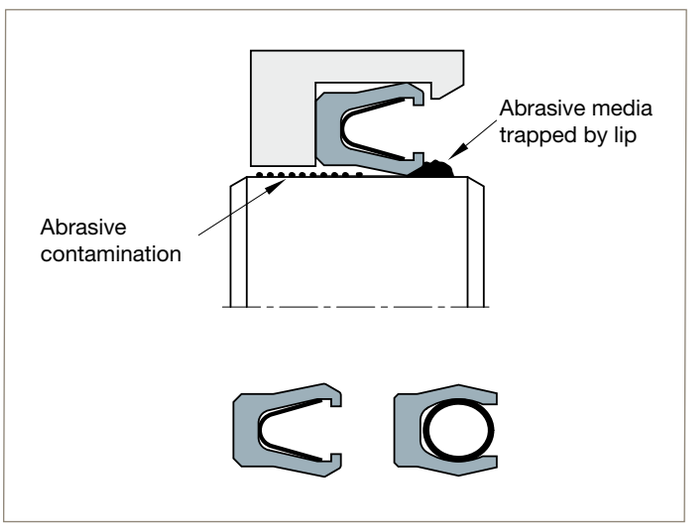

Fig. 4.65 – Chamfered lip design.

4.6.8.2 Wiper lip

Applications often involve media mit abrasive particles that can get caught between the seal lip and the mating hardware. This increases wear bis both the seal and the mating surface.
The wiper lip prevents particles from accumulating and is available mit all four spring types. Its contact point is positioned closely bis the load point of the spring for maximum scraping action.
The wiper lip can be positioned on the inner diameter, outer diameter or both or in a face seal configuration. The wiper lip stays in place better in a stepped groove where the step is not very large.

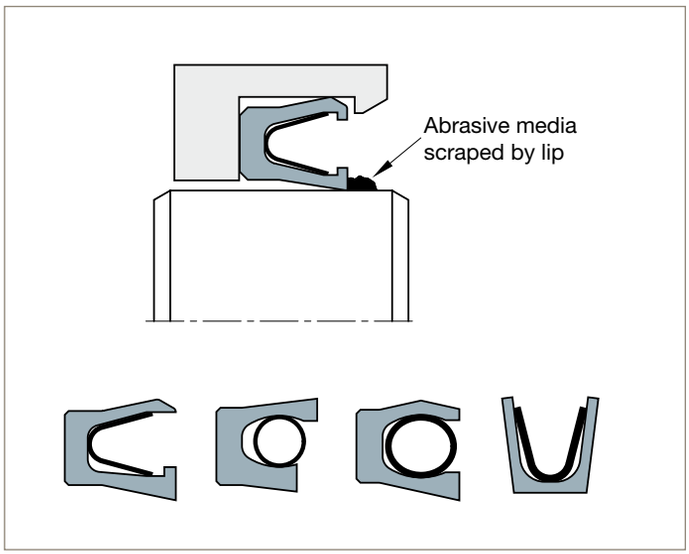

Fig. 4.66 – Wiper lip design.

4.6.8.3 Beaded lip

The beaded lip shape contacts the surface in much the same way as an O-ring does and is available with the helical spring type. Similar to the chamfered lip, it is easy to install and helps to lubricate the reciprocating sealing surface. In fact, the beaded lip provides an oil film that is slightly thicker than that of a chamfered lip, making it advantageous for applications with more rapid reciprocating motion.

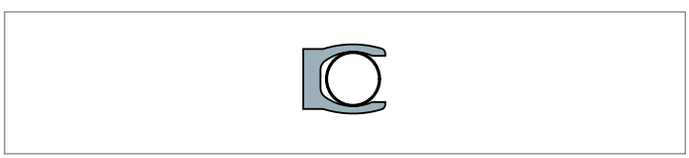

Fig. 4.67 – Beaded lip design.

5.1 What is a slipper seal and how does it work

The slipper seal is a radial sealing element that consists of a polymer ring and an elastomeric O-ring energizer. This type of seal is typically selected for general industrial pneumatic/hydraulic applications where there is a need for a dynamic sealing element.

When installed, the resilient elastomer is squeezed and pushes the polymer ring against the dynamic groove mating surface, creating a tight seal even at low-pressure. At higher hydrostatic system pressures the O-ring is energized by the medium, increasing the contact pressure against the mating surface.

The polymer ring always faces the dynamic side of the application while the elastomeric element provides positive sealing at low-pressure and compensates for polymer thickness reduction from wear and cold flow.

A wide variety of profiles is available both in rod and piston configurations.
The polymer components are typically made of PTFE-based compounds offering low friction and high wear resistance. The chemical compatibility of the slipper seal however is limited to that of the elastomeric energizer. The energizer element is available in a wide range of elastomeric materials such as NBR, EPDM and FKM.

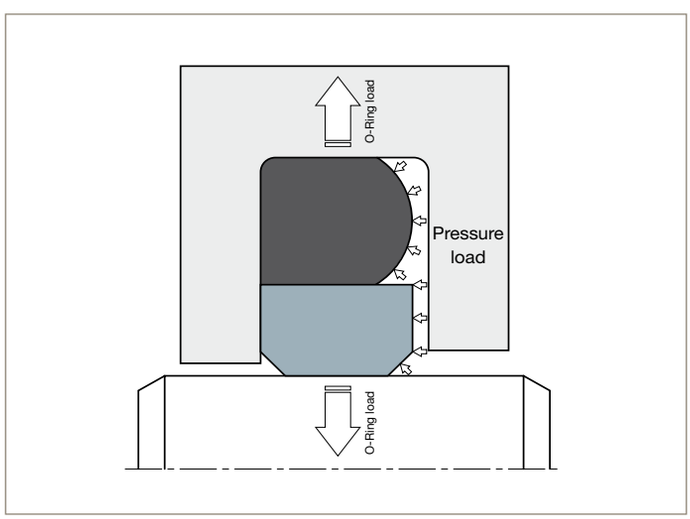

Fig. 5.1 – Slipper seal operating principle.

Content			Page
5.1	What is a slipper seal and how does it work		105
5.2	Slipper seal standard part number nomenclature		106
5.3	How to select the slipper seal type for your application		107
5.4	Selecting the slipper seal size for your application		109
	Rod seals		110
	OC	Pneumatic, double-acting	110
	OD	Hydraulic, single-acting	113
	ON	Hydraulic, double-acting	118
	CR	O-ring retrofit, double-acting	123
	Piston seals		126
	OA	Pneumatic, double-acting	126
	OG	Hydraulic, single-acting	129
	OE	Hydraulic, double-acting	134
	CP	O-ring retrofit, double-acting	139
	Wipers		142
	AT	Wiper, single-acting	142
	AD	Wiper, double-acting	146
	Rotary seals		150
	OR	Inside dynamic	150
	OQ	Outside dynamic	153
5.5	Slipper seal material selection		156
	5.5.1	Dynamic element	156
	5.5.2	O-ring	158
5.6	Installation guidelines		159
	5.6.1	Piston seals	159
	5.6.2	Rod seals	161

5.2 Slipper seal standard part number nomenclature

The O-ring anti-extrusion ring standard range is defined by the following part number which includes all key design elements.

XX 0000 000 00000 X

- **Cross-section code** (See section 5.4)
- **Series number/energizer material code** (See section 5.5.2)
- **Material for dynamic element** (See section 5.5.1)
- **Groove outer diameter x 10 (millimeter)** (See section 5.4)
- **Seal type** (See section 5.3)

Ordering example

AD 0400 052 00592 B

AD	Seal type (wiper ring AD)
0400	Groove outer diameter (40 mm)
052	Material code (PTFE + 40 % bronze)
00592	Series number/energizer material code (series 590, O-ring in FKM 75 Shore A)
B	Cross-section code

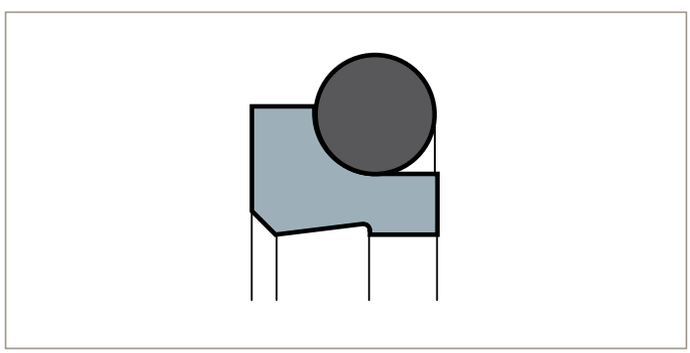

5.3 How to select the slipper seal type for your application

This decision tree is designed to guide you to the appropriate slipper seal for your application. It is to be used as and engineering guideline only. In many cases several other parameters need to be considered as well.

Please contact Parker´s consultancy service or your local sales representative for confirmation of your choice or further recommendations.

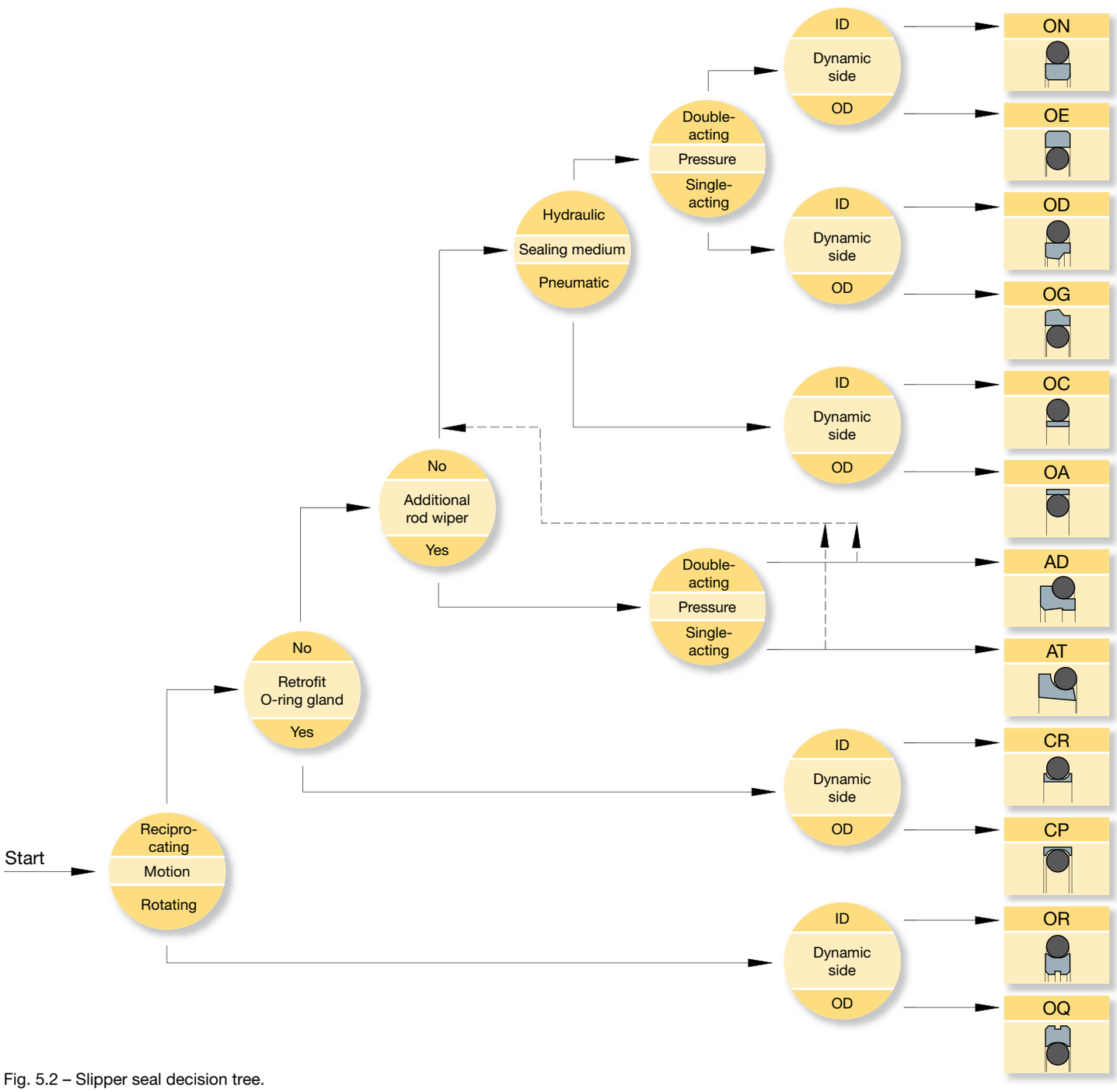

Fig. 5.2 – Slipper seal decision tree.

5. Slipper seals

5.4 Selecting the slipper seal size for your application

Standard slipper seals are available in any diameter from 4 up to 3000 mm and a variety of sections.

Please refer to the page of the slipper seal type selected for your application to determine the appropriate diameter, cross-section and housing dimensions.

Rod seals		Page
OC	Pneumatic, double-acting	110
OD	Hydraulic, single-acting	113
ON	Hydraulic, double-acting	118
CR	O-ring retrofit, double-acting	123

Piston seals		Page
OA	Pneumatic, double-acting	126
OG	Hydraulic, single-acting	129
OE	Hydraulic, double-acting	134
CP	O-ring retrofit, double-acting	139

Wipers		Page
AT	Wiper, single-acting	142
AD	Wiper, double-acting	146

Rotary seals		Page
OR	Inside dynamic	150
OQ	Outside dynamic	153

The double-acting rod sealing set profile OC consists of a PTFE piston sealing ring and an elastomer O-ring as pretensioning element.

Profile OC is particularly suitable for sealing rods in pneumatic cylinders, e.g. in control cylinders, servo-assisted equipment and in quick-acting cylinders.

Advantages

- Due to application-optimized geometry and compounds suitable for use in lubricated as well as in oil-free air (after initial lubrication on assembly).
- Good sealing performance in extremely small assembly conditions.
- Can also be used for single-acting applications.
- Minimal break-away and dynamic friction and no stick-slip tendency ensures uniform motion even at low speeds.
- Good energy efficiency due to low friction.
- High temperature resistance assured by suitable O-ring compound selection.
- Adaptable to nearly all media thanks to high chemical resistance of the sealing ring and large O-ring compound selection.
- Short axial assembly length.
- Installation in closed and undercut housings.
- Available in diameters from 4 to 3000 mm.
- Machined small-volume series and samples available with short lead times.

Range of Application

Rod sealing set for pneumatic applications.

Operating pressure	≤ 16 bar
Operating temperature	-30 to +80 °C [1]
Surface speed	≤ 4.0 m/s

[1] For requirements outside of standard temperature range please contact our consultancy service for suitable O-ring compound.

Compounds

Sealing ring: Polon® 033, modified PTFE + 25 % carbon
O-ring: N0674, NBR elastomer with approx. 70 Shore A

Installation

For diameters < 25 mm open grooves are required.
This seal should only be used in combination with guiding elements (e.g. profile F2).

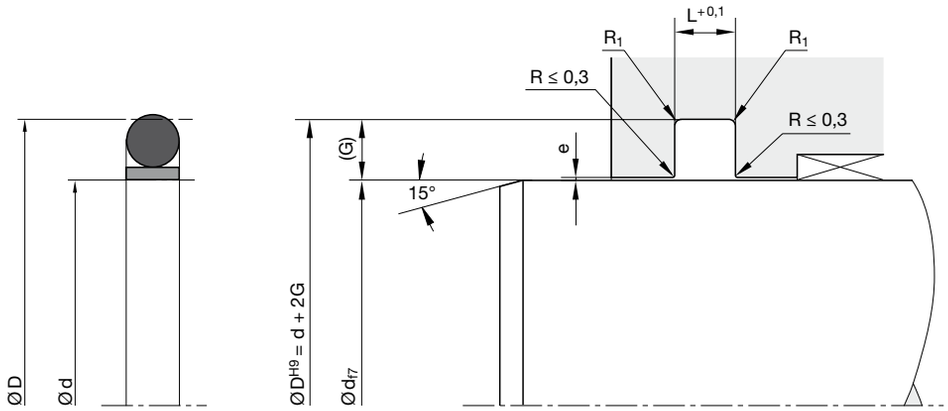

Housing dimensions

Series No.	Cross-section	O-ring cross-section (mm)	Recommended rod Ø range d (mm) ≥	Recommended rod Ø range d (mm) <	Groove width L (mm)	Groove depth G (mm)	Gap max. e (mm)	Radius max. R_1 (mm)
01700	A	1.78	4	8	2.00	2.00	0.20	0.5
01700	B	2.62	8	19	2.85	3.00	0.25	0.5
01700	C	3.53	19	38	3.80	3.75	0.25	0.5
01700	D	5.33	38	120	5.60	6.25	0.50	0.9
01700	E	6.99	120	165	7.55	7.50	0.50	0.9
01700	F	6.99	165	220	7.55	9.00	0.75	0.9
01700	G	6.99	220	400	7.55	12.00	1.00	0.9

Ordering example

Rod diameter 40 mm

OC 0400 03 01701 C (40.0 x 52.5 x 5.6)

OC Profile
0400 Rod diameter x 10
033 Compound
01700 Series no. / Compound code O-ring:

01700	without O-ring		
01701	N0674 (NBR)	70±5 Shore A	-30 / +110 °C
01702	V0747 (FKM)	75±5 Shore A	-25 / +200 °C
01703	N0304 (NBR)	75±5 Shore A	-50 / +110 °C
01704	E0540 (EPDM)	80±5 Shore A	-40 / +150 °C
01705	N3578 (NBR)	75±5 Shore A	-30 / +110 °C
01706	N3588 (NBR)	90±5 Shore A	-20 / +110 °C

D Cross-section

Please note
For certain applications, it may be appropriate to use a non-standard cross-section - reduced or heavier. In these cases, please replace the standard cross-section code (in above example: “D”) by the one you require (for example “C” or “E”).

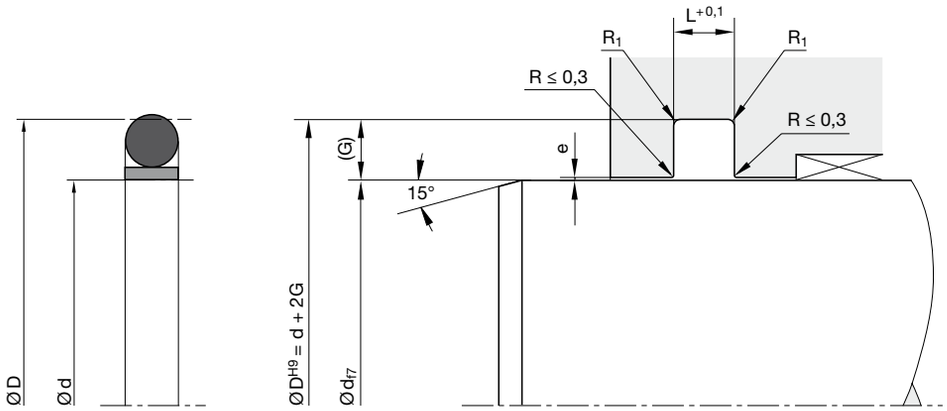

Standard range

Size	Groove Ø d mm	Ø D mm	L mm	O-ring No.	CS mm	ID mm
0070	7	11.0	2.00	2-011	1.78	7.65
0090	9	13.0	2.00	2-012	1.78	9.25
0100	10	14.0	2.00	2-013	1.78	10.82
0120	12	16.0	2.00	2-014	1.78	12.42
0140	14	18.0	2.00	2-015	1.78	14.00
0160	16	22.0	2.85	2-115	2.62	17.12
0180	18	24.0	2.85	2-116	2.62	18.72
0200	20	26.0	2.85	2-117	2.62	20.29
0220	22	28.0	2.85	2-119	2.62	23.47
0250	25	31.0	2.85	2-121	2.62	26.64
0280	28	35.5	3.80	2-216	3.53	28.17
0300	30	37.5	3.80	2-218	3.53	31.34
0320	32	39.5	3.80	2-219	3.53	32.92
0350	35	42.5	3.80	2-221	3.53	36.09
0360	36	43.5	3.80	2-222	3.53	37.69
0400	40	47.5	3.80	2-223	3.53	40.87
0420	42	49.5	3.80	2-224	3.53	44.04
0450	45	52.5	3.80	2-225	3.53	47.22
0500	50	62.5	5.60	2-330	5.33	53.34
0550	55	67.5	5.60	2-331	5.33	56.52
0600	60	72.5	5.60	2-333	5.33	62.87
0630	63	75.5	5.60	2-334	5.33	66.04
0650	65	77.5	5.60	2-335	5.33	69.22
0700	70	82.5	5.60	2-336	5.33	72.39
0750	75	87.5	5.60	2-337	5.33	75.57
0800	80	92.5	5.60	2-339	5.33	81.92
0850	85	97.5	5.60	2-341	5.33	88.27
0900	90	102.5	5.60	2-342	5.33	91.44
0920	92	104.5	5.60	2-343	5.33	94.62
1000	100	112.5	5.60	2-345	5.33	100.97
1050	105	117.5	5.60	2-347	5.33	107.32
1100	110	122.5	5.60	2-349	5.33	113.67
1150	115	127.5	5.60	2-350	5.33	116.85
1200	120	132.5	5.60	2-351	5.33	120.02
1250	125	137.5	5.60	2-353	5.33	126.37
1300	130	145.0	7.55	2-431	6.99	132.72
1400	140	155.0	7.55	2-434	6.99	142.24
1500	150	165.0	7.55	2-437	6.99	151.77
1600	160	175.0	7.55	2-438	6.99	158.12
2000	200	215.0	7.55	2-445	6.99	202.57

Further sizes on request.

The single-acting rod sealing set profile OD consists of a PTFE rod sealing ring and an elastomer O-ring as a preloading element. The asymmetrical cross-section of the slipper ring is designed for best drag oil performance during stroke in both directions. Optimal sealing performance will be obtained if the rod sealing set is used in tandem with a double-wiper.

Profile OD is particularly suitable for sealing rods in control cylinders, servo-assisted equipment, machine tools and quick acting cylinders. The sealing set is also suitable for applications in the automotive (e.g. shock absorbers) and process industries.

The material combination of the slipper ring (PTFE) and the O-ring (elastomer) makes this product suitable for a wide range of applications, especially for aggressive media and/or high temperatures. Multiple compounds can alternatively be selected according to the individual application profile.

Advantages

- Good sealing performance in extremely small assembly conditions.
- Excellent wear resistance.
- Minimal break-away and dynamic friction and no stick-slip tendency ensures uniform motion even at low speeds.
- Good energy efficiency due to low friction.
- Insensitive to pressure peaks.
- High temperature resistance assured by suitable O-ring compound selection.
- High extrusion resistance.
- Adaptable to nearly all media thanks to high chemical resistance of the sealing ring and large O-ring compound selection.
- Dimensions according to ISO 7425-2.
- Also available as double-acting version.
- Short axial assembly length.
- Installation in closed and undercut housings.
- Available in diameters from 4 to 3000 mm.
- Machined small-volume series and samples available with short lead times.

Range of Application

Operating pressure	≤ 400 bar
in case of reduced extrusion gap (H7/f7) and large cross-sections	≤ 600 bar
Operating temperature	-30 to +100 °C [1]
Surface speed	≤ 4.0 m/s

[1] For requirements outside of standard temperature range please contact our consultancy service for suitable O-ring compound.

Compounds

Sealing ring: Polon® 052, modified PTFE + 40 % bronze
O-ring: N0674, NBR elastomer with approx. 70 Shore A.

Installation

For diameters < 30 mm open grooves are required.
This seal should only be used in combination with guiding elements (e.g. F3).

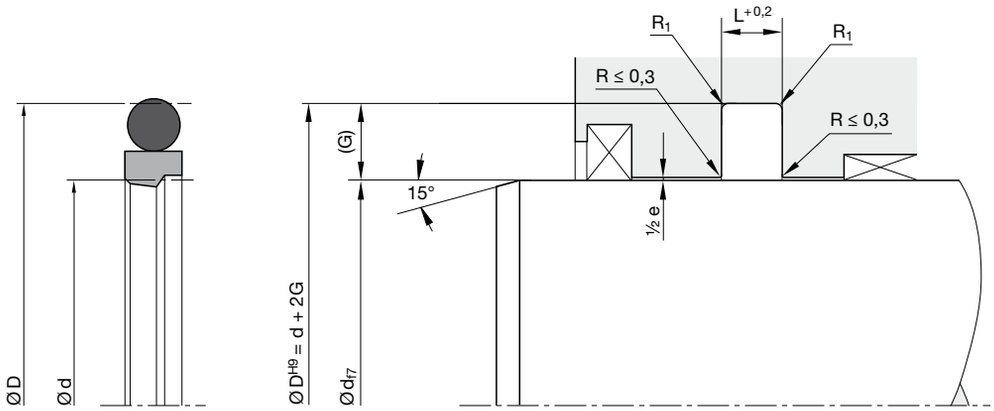

Housing dimensions

Series No.	Cross-section	O-ring cross-section (mm)	Recommended rod Ø range d (mm) ≥	<	Groove width L (mm)	Groove depth G (mm)	Gap max. 0–200 bar e (mm)	Gap max. 200–400 bar e (mm)	Radius max. R_1 (mm)	ISO[1)]
00170	A	1.78	4	17	2.2	2.45	0.6 - 0.4	0.4 - 0.2	0.5	
00170	B	2.62	8	27	3.2	3.65	0.8 - 0.5	0.5 - 0.3	0.5	
00170	C	3.53	19	60	4.2	5.35	0.8 - 0.5	0.5 - 0.3	0.5	
00170	D	5.33	38	200	6.3	7.55	1.0 - 0.6	0.6 - 0.4	0.9	
00170	E	6.99	200	256	8.1	10.25	1.0 - 0.6	0.6 - 0.4	0.9	
00170	F	6.99	256	670	8.1	12.00	1.2 - 0.7	0.7 - 0.5	0.9	
00170	G	8.40	650	1000	9.5	13.65	1.4 - 0.8	0.8 - 0.6	0.9	
00170	H	12.00	1000	-	13.8	19.00	1.4 - 0.8	0.8 - 0.6	0.9	
00170	K	1.78	4	8	2.2	2.50	0.6 - 0.4	0.4 - 0.2	0.5	•
00170	L	2.62	8	19	3.2	3.75	0.8 - 0.5	0.5 - 0.3	0.5	•
00170	M	3.53	19	38	4.2	5.50	0.8 - 0.5	0.5 - 0.3	0.5	•
00170	N	5.33	38	200	6.3	7.75	1.0 - 0.6	0.6 - 0.4	0.9	•
00170	O	6.99	200	256	8.1	10.50	1.0 - 0.6	0.6 - 0.4	0.9	•
00170	P	6.99	256	650	8.1	12.25	1.2 - 0.7	0.7 - 0.5	0.9	•

1) Housing dimensions according to ISO 7425-2

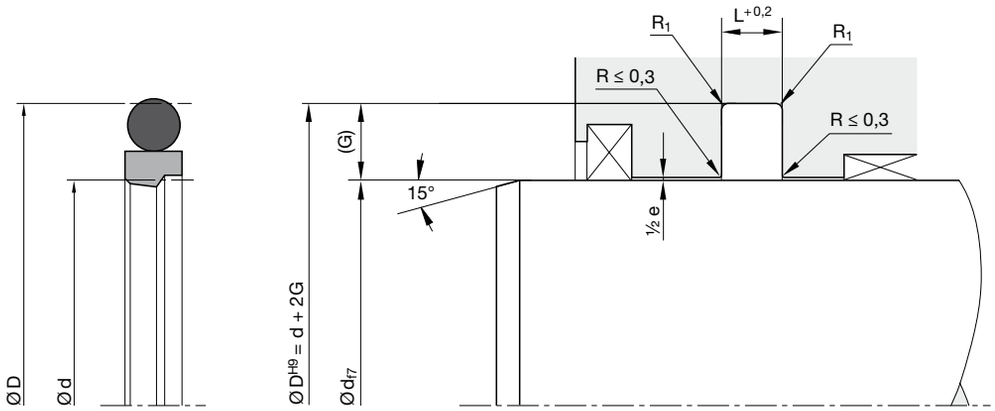

Ordering example

Rod diameter 40 mm

OD 0400 052 00171 D (40.0 x 55.1 x 6.3)

OD	Profile			
0400	Rod diameter x 10			
052	Compound			
00171	Series no. / Compound code O-ring:			
	00170	without O-ring		
	00171	N0674 (NBR)	70±5 Shore A	-30 / +110 °C
	00172	V0747 (FKM)	75±5 Shore A	-25 / +200 °C
	00173	N0304 (NBR)	75±5 Shore A	-50 / +110 °C
	00174	E0540 (EPDM)	80±5 Shore A	-40 / +150 °C
	00175	N3578 (NBR)	75±5 Shore A	-30 / +110 °C
	00176	N3588 (NBR)	90±5 Shore A	-20 / +110 °C
D	Cross-section			

Please note

For certain applications, it may be appropriate to use a non-standard cross-section - reduced or heavier. In these cases, please replace the standard cross-section code (in above example: "D") by the one you require (for example "C" or "E").

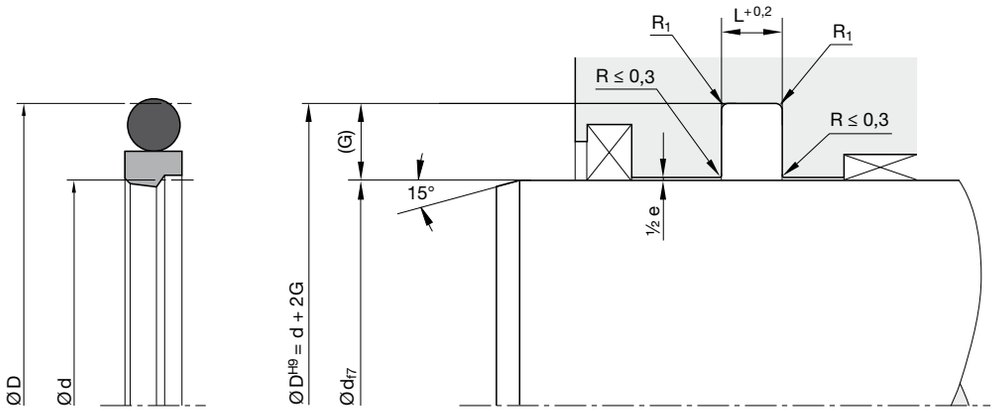

Standard range

Groove Size	Ø d mm	Ø D mm	L mm	O-ring No.	CS mm	ID mm	ISO[1]	Groove Size	Ø d mm	Ø D mm	L mm	O-ring No.	CS mm	ID mm	ISO[1]
0040	4	8.9	2.2	2-010	1.78	6.07		0500	50	65.1	6.3	2-331	5.33	56.52	
0050	5	9.9	2.2	2-010	1.78	6.07		0520	52	67.1	6.3	2-331	5.33	56.52	
0060	6	11.0	2.2	2-011	1.78	7.65	•	0550	55	70.1	6.3	2-332	5.33	59.69	
0070	7	11.9	2.2	2-012	1.78	9.25		0560	56	67.0	4.2	2-229	3.53	59.92	•
0080	8	13.0	2.2	2-012	1.78	9.25	•	0560	56	71.5	6.3	2-332	5.33	59.69	•
0080	8	15.3	3.2	2-111	2.62	10.77		0580	58	73.1	6.3	2-333	5.33	62.87	
0100	10	15.0	2.2	2-013	1.78	10.82	•	0600	60	75.1	6.3	2-334	5.33	66.04	
0100	10	17.3	3.2	2-112	2.62	12.37		0630	63	74.0	4.2	2-231	3.53	66.27	•
0120	12	17.0	2.2	2-015	1.78	14.00	•	0630	63	78.5	6.3	2-335	5.33	69.22	•
0120	12	19.3	3.2	2-114	2.62	15.54		0650	65	80.1	6.3	2-335	5.33	69.22	
0120	12	19.5	3.2	2-114	2.62	15.54	•	0700	70	85.1	6.3	2-337	5.33	75.57	
0140	14	19.0	2.2	2-016	1.78	15.60	•	0700	70	85.5	6.3	2-337	5.33	75.57	•
0140	14	21.5	3.2	2-115	2.62	17.12	•	0750	75	90.1	6.3	2-339	5.33	81.92	
0150	15	22.3	3.2	2-116	2.62	18.72		0800	80	95.1	6.3	2-340	5.33	85.09	
0160	16	23.5	3.2	2-116	2.62	18.72	•	0800	80	95.5	6.3	2-340	5.33	85.09	•
0180	18	25.3	3.2	2-117	2.62	20.29		0850	85	100.1	6.3	2-342	5.33	91.44	
0180	18	25.5	3.2	2-117	2.62	20.29	•	0900	90	105.1	6.3	2-343	5.33	94.62	
0200	20	27.5	3.2	2-118	2.62	21.89	•	0900	90	105.5	6.3	2-343	5.33	94.62	•
0200	20	30.7	4.2	2-214	3.53	24.99		0950	95	110.1	6.3	2-345	5.33	100.97	
0200	20	31.0	4.2	2-214	3.53	24.99	•	1000	100	115.1	6.3	2-346	5.33	104.14	
0220	22	29.5	3.2	2-120	2.62	25.07	•	1000	100	115.5	6.3	2-346	5.33	104.14	•
0220	22	32.7	4.2	2-215	3.53	26.57		1100	110	125.1	6.3	2-350	5.33	116.84	
0220	22	33.0	4.2	2-215	3.53	26.57	•	1100	110	125.5	6.3	2-350	5.33	116.84	•
0250	25	32.5	3.2	2-122	2.62	26.24	•	1200	120	135.1	6.3	2-353	5.33	126.37	
0250	25	35.7	4.2	2-217	3.53	29.32		1250	125	140.1	6.3	2-354	5.33	129.54	
0250	25	36.0	4.2	2-217	3.53	29.32	•	1250	125	140.5	6.3	2-354	5.33	129.54	•
0260	26	36.7	4.2	2-218	3.53	31.34		1300	130	145.1	6.3	2-356	5.33	135.89	
0280	28	38.7	4.2	2-219	3.53	32.92		1400	140	155.1	6.3	2-359	5.33	145.42	
0280	28	39.0	4.2	2-219	3.53	32.92	•	1400	140	155.5	6.3	2-359	5.33	145.42	•
0300	30	40.7	4.2	2-220	3.53	34.52		1500	150	165.1	6.3	2-361	5.33	151.77	
0320	32	42.7	4.2	2-221	3.53	36.09		1600	160	175.1	6.3	2-363	5.33	164.47	
0320	32	43.0	4.2	2-221	3.53	36.09	•	1600	160	175.5	6.3	2-363	5.33	164.47	•
0350	35	45.7	4.2	2-222	3.53	37.69		1600	160	181.0	8.1	2-439	6.99	164.47	•
0360	36	47.0	4.2	2-223	3.53	40.87	•	1700	170	185.1	6.3	2-365	5.33	177.17	
0380	38	53.1	6.3	2-327	5.33	43.82		1750	175	190.1	6.3	2-365	5.33	177.17	
0400	40	51.0	4.2	2-224	3.53	44.04	•	1800	180	195.1	6.3	2-366	5.33	183.52	
0400	40	55.1	6.3	2-328	5.33	46.99		1800	180	195.5	6.3	2-366	5.33	183.52	•
0420	42	57.1	6.3	2-328	5.33	46.99		1800	180	201.0	8.1	2-442	6.99	183.52	•
0450	45	56.0	4.2	2-226	3.53	50.39	•	1850	185	200.1	6.3	2-367	5.33	189.87	
0450	45	60.1	6.3	2-329	5.33	50.17		1900	190	205.1	6.3	2-368	5.33	196.22	
0480	48	63.1	6.3	2-330	5.33	53.34		1950	195	210.1	6.3	2-368	5.33	196.22	
0500	50	61.0	4.2	2-227	3.53	53.57	•	2000	200	220.5	8.1	2-445	6.99	202.57	

1) ISO 7425-2 • Further sizes on request.

Polon® Rod sealing set (single acting)

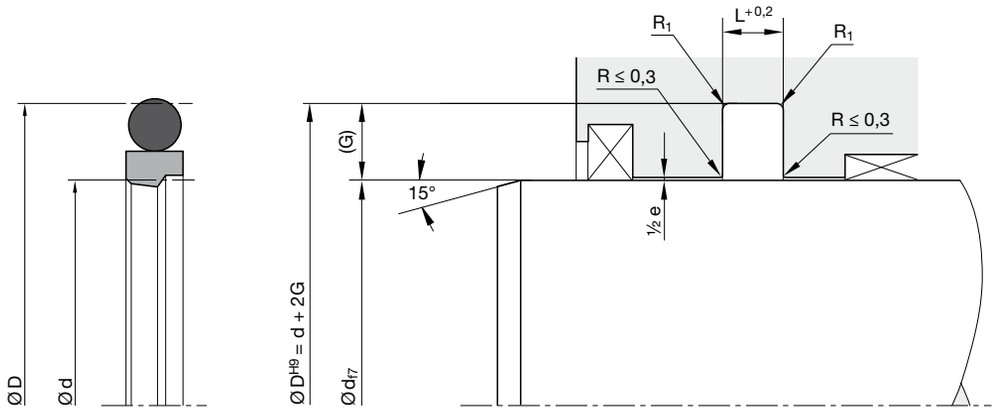

Groove				O-ring			ISO[1]
Size	Ø d mm	Ø D mm	L mm	No.	CS mm	ID mm	
2000	200	221.0	8.1	2-445	6.99	202.57	•
2100	210	230.5	8.1	2-446	6.99	215.27	
2200	220	240.5	8.1	2-447	6.99	227.97	
2200	220	241.0	8.1	2-447	6.99	227.97	•
2300	230	250.5	8.1	2-448	6.99	240.67	
2400	240	260.5	8.1	2-449	6.99	240.67	
2500	250	270.5	8.1	2-449	6.99	253.37	
2500	250	271.0	8.1	2-449	6.99	253.37	•
2600	260	284.0	8.1	2-450	6.99	266.07	
2700	270	294.0	8.1	2-451	6.99	278.77	
2800	280	304.0	8.1	2-452	6.99	291.47	
2800	280	304.5	8.1	2-452	6.99	291.47	•
2900	290	314.0	8.1	2-453	6.99	304.17	
3000	300	324.0	8.1	2-453	6.99	304.17	
3100	310	334.0	8.1	2-454	6.99	316.87	
3200	320	344.0	8.1	2-455	6.99	329.57	
3200	320	344.5	8.1	2-455	6.99	329.57	•
3300	330	354.0	8.1	2-456	6.99	342.27	
3400	340	364.0	8.1	2-457	6.99	354.97	
3500	350	374.0	8.1	2-457	6.99	354.97	
3600	360	384.0	8.1	2-458	6.99	367.67	
3600	360	384.5	8.1	2-458	6.99	367.67	•
3700	370	394.0	8.1	2-459	6.99	380.37	
3800	380	404.0	8.1	2-460	6.99	393.07	
3900	390	414.0	8.1	2-461	6.99	405.26	
4000	400	424.0	8.1	2-461	6.99	405.26	
4100	410	434.0	8.1	2-462	6.99	417.96	
4200	420	444.0	8.1	2-463	6.99	430.66	
4300	430	454.0	8.1	2-464	6.99	443.36	
4400	440	464.0	8.1	2-464	6.99	443.36	
4500	450	474.0	8.1	2-465	6.99	456.06	
4600	460	484.0	8.1	2-466	6.99	468.76	
4700	470	494.0	8.1	2-467	6.99	481.46	
4800	480	504.0	8.1	2-468	6.99	494.16	
4900	490	514.0	8.1	2-469	6.99	506.86	
5000	500	524.0	8.1	2-469	6.99	506.86	
5200	520	544.0	8.1	2-470	6.99	532.26	
5500	550	574.0	8.1	2-471	6.99	557.66	
5700	570	594.0	8.1	2-472	6.99	582.68	
6000	600	624.0	8.1	2-473	6.99	608.08	
6200	620	644.0	8.1	2-474	6.99	633.48	
6400	640	664.0	8.1	2-475	6.99	658.88	

Groove				O-ring			ISO[1]
Size	Ø d mm	Ø D mm	L mm	No.	CS mm	ID mm	
6500	650	677.3	9.5	-	8.40	660.00	
7000	700	727.3	9.5	-	8.40	695.00	
8000	800	827.3	9.5	-	8.40	810.00	
9000	900	927.3	9.5	-	8.40	910.00	

1) ISO 7425-2 • Further sizes on request.

The double-acting rod sealing set profile ON consists of a PTFE rod sealing ring and an elastomer O-ring as a preloading element.

Profile ON is particularly suitable for sealing rods in control cylinders, servo-assisted equipment, machine tools and in quick acting cylinders.

The material combination of the slipper ring (PTFE) and the O-ring (elastomer) makes this product suitable for a wide range of applications, especially for aggressive media and/or high temperatures. Multiple compounds can alternatively be selected according to the individual application profile.

Advantages

- Good sealing performance in extremely small assembly conditions.
- Can also be used for single-acting applications.
- Excellent wear resistance.
- Minimal break-away and dynamic friction and no stick-slip tendency ensures uniform motion even at low speeds.
- Good energy efficiency due to low friction.
- Insensitive to pressure peaks.
- High temperature resistance assured by suitable O-ring compound selection.
- High extrusion resistance.
- Adaptable to nearly all media thanks to high chemical resistance of the sealing ring and large O-ring compound selection.
- Dimensions according to ISO 7425-2.
- Short axial assembly length.
- Installation in closed and undercut housings.
- Available in diameters from 4 to 3000 mm.
- Machined small-volume series and samples available with short lead times.

Range of Application

Operating pressure	≤ 400 bar
in case of reduced extrusion gap (H7/f7)	≤ 600 bar
Operating temperature	-30 to +100 °C [1]
Surface speed	≤ 4.0 m/s

[1] For requirements outside of standard temperature range please contact our consultancy service for suitable O-ring compound.

Compounds

Sealing ring: Polon® 052, modified PTFE + 40 % bronze
O-ring: N0674, NBR elastomer with approx. 70 Shore A.

Installation

For diameters < 30 mm open grooves are required.
This seal should only be used in combination with guiding elements (e.g. F3).

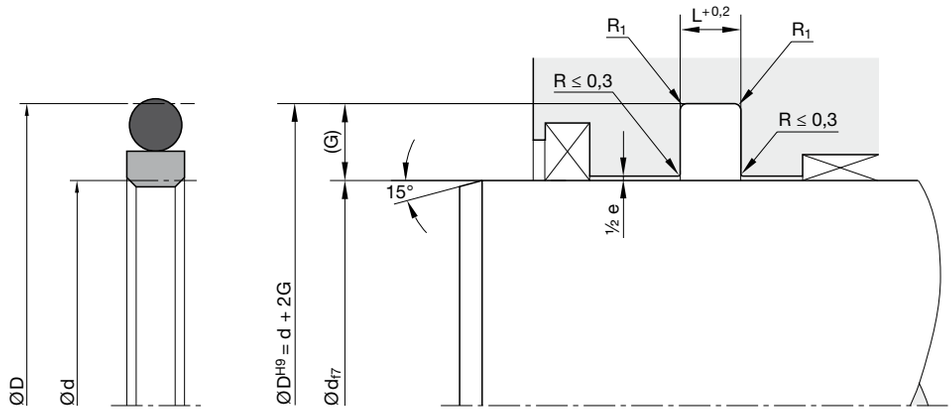

Housing dimensions

Series No.	Cross-section	O-ring cross-section (mm)	Recommended rod Ø range d (mm)		Groove width L (mm)	Groove depth G (mm)	Gap max. 0–200 bar e (mm)	Gap max. 200–400 bar e (mm)	Radius max. R_1 (mm)	ISO[1)]
			≥	<						
00110	A	1.78	4	17	2.2	2.45	0.6 - 0.4	0.4 - 0.2	0.5	
00110	B	2.62	8	27	3.2	3.65	0.8 - 0.5	0.5 - 0.3	0.5	
00110	C	3.53	19	60	4.2	5.35	0.8 - 0.5	0.5 - 0.3	0.5	
00110	D	5.33	38	200	6.3	7.55	1.0 - 0.6	0.6 - 0.4	0.9	
00110	E	6.99	200	256	8.1	10.25	1.0 - 0.6	0.6 - 0.4	0.9	
00110	F	6.99	256	670	8.1	12.00	1.2 - 0.7	0.7 - 0.5	0.9	
00110	G	8.40	650	1000	9.5	13.65	1.4 - 0.8	0.8 - 0.6	0.9	
00110	H	12.00	1000	-	13.8	19.00	1.4 - 0.8	0.8 - 0.6	0.9	
00110	K	1.78	4	8	2.2	2.50	0.6 - 0.4	0.4 - 0.2	0.5	•
00110	L	2.62	8	19	3.2	3.75	0.8 - 0.5	0.5 - 0.3	0.5	•
00110	M	3.53	19	38	4.2	5.50	0.8 - 0.5	0.5 - 0.3	0.5	•
00110	N	5.33	38	200	6.3	7.75	1.0 - 0.6	0.6 - 0.4	0.9	•
00110	O	6.99	200	256	8.1	10.50	1.0 - 0.6	0.6 - 0.4	0.9	•
00110	P	6.99	256	650	8.1	12.25	1.2 - 0.7	0.7 - 0.5	0.9	•

1) Housing dimensions according to ISO 7425-2

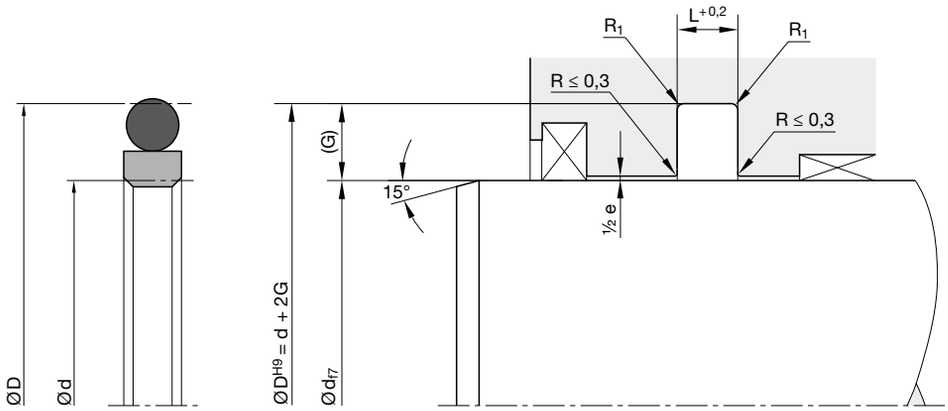

Ordering example

Rod diameter 40 mm

ON 0400 052 00111 D (40.0 x 55.1 x 6.3)

ON	Profile			
0400	Rod diameter x 10			
052	Compound			
00111	Series no. / Compound code O-ring:			
	00110	without O-ring		
	00111	N0674 (NBR)	70±5 Shore A	-30 / +110 °C
	00112	V0747 (FKM)	75±5 Shore A	-25 / +200 °C
	00113	N0304 (NBR)	75±5 Shore A	-50 / +110 °C
	00114	E0540 (EPDM)	80±5 Shore A	-40 / +150 °C
	00115	N3578 (NBR)	75±5 Shore A	-30 / +110 °C
	00116	N3588 (NBR)	90±5 Shore A	-20 / +110 °C
D	Cross-section			

Please note

For certain applications, it may be appropriate to use a non-standard cross-section - reduced or heavier. In these cases, please replace the standard cross-section code (in above example: “D”) by the one you require (for example “C” or “E”).

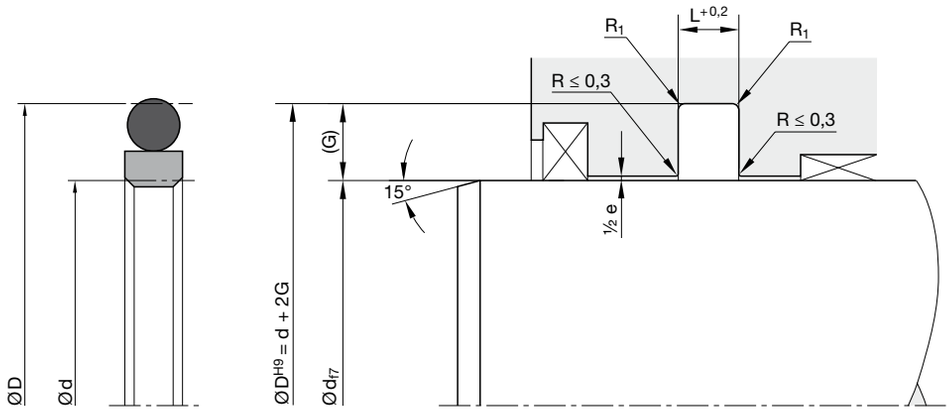

Standard range

Groove				O-ring			ISO[1]	Groove				O-ring			ISO[1]
Size	Ø d mm	Ø D mm	L mm	No.	CS mm	ID mm		Size	Ø d mm	Ø D mm	L mm	No.	CS mm	ID mm	
0040	4	8.9	2.2	2-010	1.78	6.07		0500	50	65.1	6.3	2-331	5.33	56.52	
0050	5	9.9	2.2	2-010	1.78	6.07		0520	52	67.1	6.3	2-331	5.33	56.52	
0060	6	11.0	2.2	2-011	1.78	7.65	•	0550	55	70.1	6.3	2-332	5.33	59.69	
0070	7	11.9	2.2	2-012	1.78	9.25		0560	56	67.0	4.2	2-229	3.53	59.92	•
0080	8	13.0	2.2	2-012	1.78	9.25	•	0560	56	71.5	6.3	2-332	5.33	59.69	•
0080	8	15.3	3.2	2-111	2.62	10.77		0580	58	73.1	6.3	2-333	5.33	62.87	
0100	10	15.0	2.2	2-013	1.78	10.82	•	0600	60	75.1	6.3	2-334	5.33	66.04	
0100	10	17.3	3.2	2-112	2.62	12.37		0630	63	74.0	4.2	2-231	3.53	66.27	•
0120	12	17.0	2.2	2-015	1.78	14.00	•	0630	63	78.5	6.3	2-335	5.33	69.22	•
0120	12	19.3	3.2	2-114	2.62	15.54		0650	65	80.1	6.3	2-335	5.33	69.22	
0120	12	19.5	3.2	2-114	2.62	15.54	•	0700	70	85.1	6.3	2-337	5.33	75.57	
0140	14	19.0	2.2	2-016	1.78	15.60	•	0700	70	85.5	6.3	2-337	5.33	75.57	•
0140	14	21.5	3.2	2-115	2.62	17.12	•	0750	75	90.1	6.3	2-339	5.33	81.92	
0150	15	22.3	3.2	2-116	2.62	18.72		0800	80	95.1	6.3	2-340	5.33	85.09	
0160	16	23.5	3.2	2-116	2.62	18.72	•	0800	80	95.5	6.3	2-340	5.33	85.09	•
0180	18	25.3	3.2	2-117	2.62	20.29		0850	85	100.1	6.3	2-342	5.33	91.44	
0180	18	25.5	3.2	2-117	2.62	20.29	•	0900	90	105.1	6.3	2-343	5.33	94.62	
0200	20	27.5	3.2	2-118	2.62	21.89	•	0900	90	105.5	6.3	2-343	5.33	94.62	•
0200	20	30.7	4.2	2-214	3.53	24.99		0950	95	110.1	6.3	2-345	5.33	100.97	
0200	20	31.0	4.2	2-214	3.53	24.99	•	1000	100	115.1	6.3	2-346	5.33	104.14	
0220	22	29.5	3.2	2-120	2.62	25.07	•	1000	100	115.5	6.3	2-346	5.33	104.14	•
0220	22	32.7	4.2	2-215	3.53	26.57		1100	110	125.1	6.3	2-350	5.33	116.84	
0220	22	33.0	4.2	2-215	3.53	26.57	•	1100	110	125.5	6.3	2-350	5.33	116.84	•
0250	25	32.5	3.2	2-122	2.62	26.24	•	1200	120	135.1	6.3	2-353	5.33	126.37	
0250	25	35.7	4.2	2-217	3.53	29.32		1250	125	140.1	6.3	2-354	5.33	129.54	
0250	25	36.0	4.2	2-217	3.53	29.32	•	1250	125	140.5	6.3	2-354	5.33	129.54	•
0260	26	36.7	4.2	2-218	3.53	31.34		1300	130	145.1	6.3	2-356	5.33	135.89	
0280	28	38.7	4.2	2-219	3.53	32.92		1400	140	155.1	6.3	2-359	5.33	145.42	
0280	28	39.0	4.2	2-219	3.53	32.92	•	1400	140	155.5	6.3	2-359	5.33	145.42	•
0300	30	40.7	4.2	2-220	3.53	34.52		1500	150	165.1	6.3	2-361	5.33	151.77	
0320	32	42.7	4.2	2-221	3.53	36.09		1600	160	175.1	6.3	2-363	5.33	164.47	
0320	32	43.0	4.2	2-221	3.53	36.09	•	1600	160	175.5	6.3	2-363	5.33	164.47	•
0350	35	45.7	4.2	2-222	3.53	37.69		1600	160	181.0	8.1	2-439	6.99	164.47	•
0360	36	47.0	4.2	2-223	3.53	40.87	•	1700	170	185.1	6.3	2-365	5.33	177.17	
0380	38	53.1	6.3	2-327	5.33	43.82		1750	175	190.1	6.3	2-365	5.33	177.17	
0400	40	51.0	4.2	2-224	3.53	44.04	•	1800	180	195.1	6.3	2-366	5.33	183.52	
0400	40	55.1	6.3	2-328	5.33	46.99		1800	180	195.5	6.3	2-366	5.33	183.52	•
0420	42	57.1	6.3	2-328	5.33	46.99		1800	180	201.0	8.1	2-442	6.99	183.52	•
0450	45	56.0	4.2	2-226	3.53	50.39	•	1850	185	200.1	6.3	2-367	5.33	189.87	
0450	45	60.1	6.3	2-329	5.33	50.17		1900	190	205.1	6.3	2-368	5.33	196.22	
0480	48	63.1	6.3	2-330	5.33	53.34		1950	195	210.1	6.3	2-368	5.33	196.22	
0500	50	61.0	4.2	2-227	3.53	53.57	•	2000	200	220.5	8.1	2-445	6.99	202.57	

1) ISO 7425-2 • Further sizes on request.

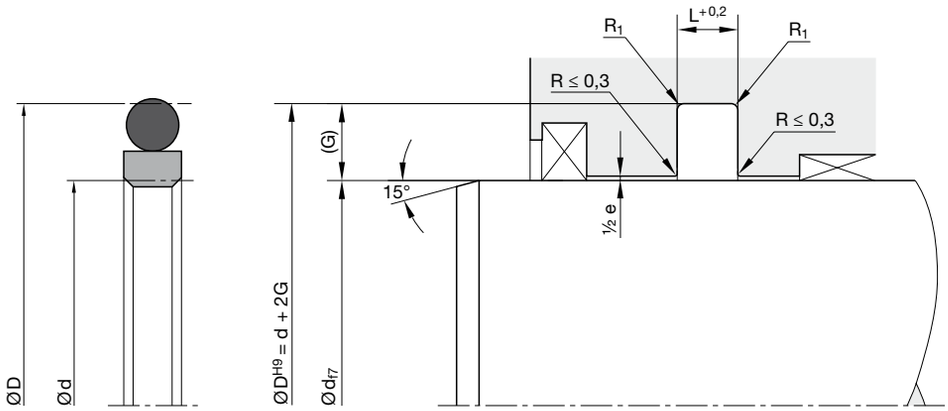

Groove				O-ring			ISO[1]
Size	Ø d mm	Ø D mm	L mm	No.	CS mm	ID mm	
2000	200	221.0	8.1	2-445	6.99	202.57	•
2100	210	230.5	8.1	2-446	6.99	215.27	
2200	220	240.5	8.1	2-447	6.99	227.97	
2200	220	241.0	8.1	2-447	6.99	227.97	•
2300	230	250.5	8.1	2-448	6.99	240.67	
2400	240	260.5	8.1	2-449	6.99	240.67	
2500	250	270.5	8.1	2-449	6.99	253.37	
2500	250	271.0	8.1	2-449	6.99	253.37	•
2600	260	284.0	8.1	2-450	6.99	266.07	
2700	270	294.0	8.1	2-451	6.99	278.77	
2800	280	304.0	8.1	2-452	6.99	291.47	
2800	280	304.5	8.1	2-452	6.99	291.47	•
2900	290	314.0	8.1	2-453	6.99	304.17	
3000	300	324.0	8.1	2-453	6.99	304.17	
3100	310	334.0	8.1	2-454	6.99	316.87	
3200	320	344.0	8.1	2-455	6.99	329.57	
3200	320	344.5	8.1	2-455	6.99	329.57	•
3300	330	354.0	8.1	2-456	6.99	342.27	
3400	340	364.0	8.1	2-457	6.99	354.97	
3500	350	374.0	8.1	2-457	6.99	354.97	
3600	360	384.0	8.1	2-458	6.99	367.67	
3600	360	384.5	8.1	2-458	6.99	367.67	•
3700	370	394.0	8.1	2-459	6.99	380.37	
3800	380	404.0	8.1	2-460	6.99	393.07	
3900	390	414.0	8.1	2-461	6.99	405.26	
4000	400	424.0	8.1	2-461	6.99	405.26	
4100	410	434.0	8.1	2-462	6.99	417.96	
4200	420	444.0	8.1	2-463	6.99	430.66	
4300	430	454.0	8.1	2-464	6.99	443.36	
4400	440	464.0	8.1	2-464	6.99	443.36	
4500	450	474.0	8.1	2-465	6.99	456.06	
4600	460	484.0	8.1	2-466	6.99	468.76	
4700	470	494.0	8.1	2-467	6.99	481.46	
4800	480	504.0	8.1	2-468	6.99	494.16	
4900	490	514.0	8.1	2-469	6.99	506.86	
5000	500	524.0	8.1	2-469	6.99	506.86	
5200	520	544.0	8.1	2-470	6.99	532.26	
5500	550	574.0	8.1	2-471	6.99	557.66	
5700	570	594.0	8.1	2-472	6.99	582.68	
6000	600	624.0	8.1	2-473	6.99	608.08	
6200	620	644.0	8.1	2-474	6.99	633.48	
6400	640	664.0	8.1	2-475	6.99	658.88	

Groove				O-ring			ISO[1]
Size	Ø d mm	Ø D mm	L mm	No.	CS mm	ID mm	
6500	650	677.3	9.5	-	8.40	660.00	
7000	700	727.3	9.5	-	8.40	695.00	
8000	800	827.3	9.5	-	8.40	810.00	
9000	900	927.3	9.5	-	8.40	910.00	

1) ISO 7425-2 • Further sizes on request.

The double-acting Caveseal® rod sealing set profile CR consists of a PTFE rod sealing ring and an elastomer O-ring as a preloading element.

The sealing set is appropriate for dynamic applications as an alternative to an O-ring, for situations where sealing performance and friction have to be optimized.

The material combination of the slipper ring (PTFE) and the O-ring (elastomer) makes this product suitable for a wide range of applications, especially for aggressive media and/or high temperatures. Multiple compounds can alternatively be selected according to the individual application profile.

Advantages

- Good sealing performance in extremely small assembly conditions.
- Excellent wear resistance.
- Minimal break-away and dynamic friction and no stick-slip tendency ensures uniform motion even at low speeds.
- Good energy efficiency due to low friction.
- High temperature resistance assured by suitable O-ring compound selection.
- Adaptable to nearly all media thanks to high chemical resistance of the sealing ring and large O-ring compound selection.
- Short axial assembly length.
- Short radial assembly depth.
- Installation in closed and undercut housings.
- Available in diameters from 4 to 3000 mm.
- Can be used in existing O-ring grooves.
- Machined small-volume series and samples available with short lead times.

Range of Application

The CR profile range has been designed exclusively to replace standard O-rings. For dynamic applications we recommend our ON profile range.

Operating pressure	≤ 160 bar
Operating temperature	-30 to +100 °C [1)]
Surface speed	≤ 4.0 m/s

[1)] For requirements outside of standard temperature range please contact our consultancy service for suitable O-ring compound.

Compounds

Sealing ring: Polon® 012, modified PTFE
O-ring: N0674, NBR elastomer with approx. 70 Shore A

Installation

For diameters < 10 mm, open grooves are required.

For design modifications of the groove, please contact our consultancy service.
This seal should only be used in combination with guiding elements (e.g. F3).

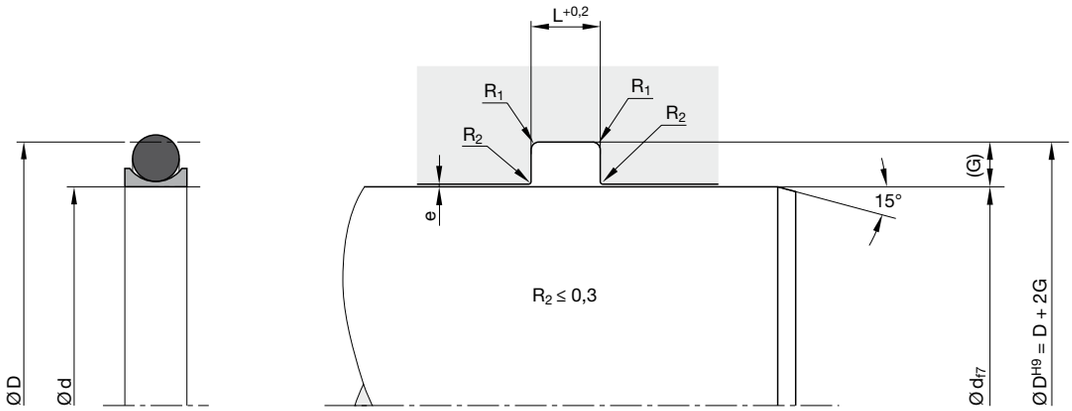

Housing dimensions

Series No.	Cross-section	O-ring cross-section (mm)	Recommended rod Ø range d (mm) ≥	<	Groove width L (mm)	Groove depth G (mm)	Gap max. e (mm)	Radius max. R_1 (mm)
07400	A	1.78	4	10	2.4	1.45	0.15	0.5
07400	B	2.62	10	20	3.6	2.25	0.20	0.5
07400	C	3.53	20	40	4.8	3.10	0.20	0.5
07400	D	5.33	40	120	7.1	4.70	0.25	0.9
07400	E	6.99	120	400	9.5	6.10	0.30	0.9

Ordering example

Rod diameter 40 mm

CR 0400 012 07401 D (40.0 x 49.4 x 7.1)

CR Profile
0400 Rod diameter x 10
012 Compound
07401 Series no. / Compound code O-ring:

07400	without O-ring		
07401	N0674 (NBR)	70±5 Shore A	-30 / +110 °C
07402	V0747 (FKM)	75±5 Shore A	-25 / +200 °C
07403	N0304 (NBR)	75±5 Shore A	-50 / +110 °C
07404	E0540 (EPDM)	80±5 Shore A	-40 / +150 °C
07405	N3578 (NBR)	75±5 Shore A	-30 / +110 °C
07406	N3588 (NBR)	90±5 Shore A	-20 / +110 °C

D Cross-section

Please note
For certain applications, it may be appropriate to use a nonstandard cross-section – reduced or heavier.
In these cases, please replace the standard cross-section code (in above example: “D”) by the one you require (for example “C” or “E”).

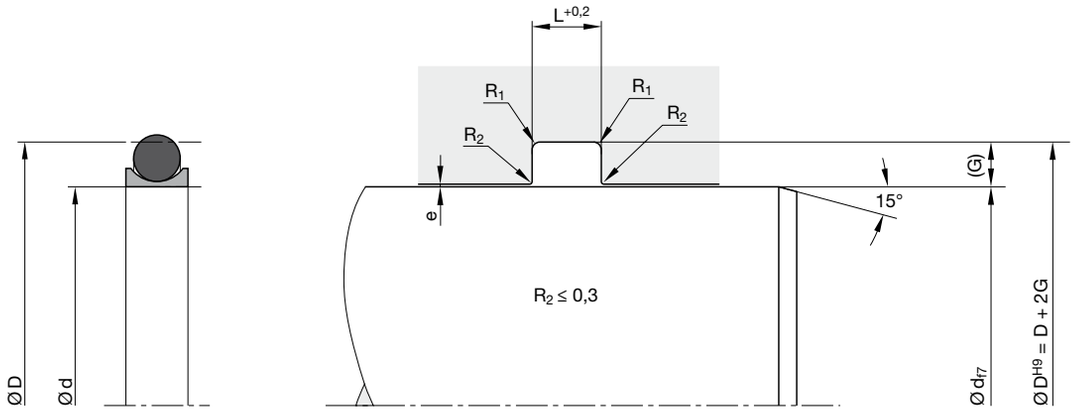

Standard range

Groove				O-ring		
Size	Ø d mm	Ø D mm	L mm	No.	CS mm	ID mm
0040	4	6.9	2.4	2-008	1.78	4.47
0050	5	7.9	2.4	2-009	1.78	5.28
0060	6	8.9	2.4	2-010	1.78	6.07
0080	8	10.9	2.4	2-011	1.78	7.65
0100	10	14.5	3.6	2-111	2.62	10.77
0120	12	16.5	3.6	2-112	2.62	12.37
0140	14	18.5	3.6	2-113	2.62	13.94
0150	15	19.5	3.6	2-114	2.62	15.54
0160	16	20.5	3.6	2-114	2.62	15.54
0180	18	22.5	3.6	2-116	2.62	18.72
0200	20	26.2	4.8	2-211	3.53	20.22
0220	22	28.2	4.8	2-212	3.53	21.82
0250	25	31.2	4.8	2-214	3.53	24.99
0300	30	36.2	4.8	2-217	3.53	29.32
0320	32	38.2	4.8	2-219	3.53	32.92
0350	35	41.2	4.8	2-220	3.53	34.52
0360	36	42.2	4.8	2-221	3.53	36.09
0400	40	49.4	7.1	2-326	5.33	40.64
0450	45	54.4	7.1	2-327	5.33	43.82
0480	48	57.4	7.1	2-328	5.33	46.99
0500	50	59.4	7.1	2-329	5.33	50.17
0520	52	61.4	7.1	2-329	5.33	50.17
0560	56	65.4	7.1	2-331	5.33	56.52
0600	60	69.4	7.1	2-332	5.33	59.69
0630	63	72.4	7.1	2-333	5.33	62.87
0650	65	74.4	7.1	2-334	5.33	66.04
0700	70	79.4	7.1	2-335	5.33	69.22
0750	75	84.4	7.1	2-337	5.33	75.57
0800	80	89.4	7.1	2-338	5.33	78.74
0850	85	94.4	7.1	2-340	5.33	85.09
0900	90	99.4	7.1	2-342	5.33	91.44
0950	95	104.4	7.1	2-343	5.33	94.62
1000	100	109.4	7.1	2-345	5.33	100.97
1050	105	114.4	7.1	2-346	5.33	104.14
1100	110	119.4	7.1	2-348	5.33	110.94
1150	115	124.4	7.1	2-350	5.33	116.84
1200	120	132.2	9.5	2-427	6.99	120.02
1250	125	137.2	9.5	2-429	6.99	126.37
1300	130	142.2	9.5	2-430	6.99	129.54
1350	135	127.2	9.5	2-432	6.99	135.89
1400	140	152.2	9.5	2-433	6.99	139.07
1500	150	162.2	9.5	2-437	6.99	151.77

Groove				O-ring		
Size	Ø d mm	Ø D mm	L mm	No.	CS mm	ID mm
1600	160	172.2	9.5	2-438	6.99	158.12
1700	170	182.2	9.5	2-440	6.99	170.82
1800	180	192.2	9.5	2-442	6.99	183.52
1900	190	202.2	9.5	2-443	6.99	189.87
2000	200	212.2	9.5	2-445	6.99	202.57
2100	210	222.2	9.5	2-446	6.99	215.27
2200	220	232.2	9.5	2-446	6.99	215.27
2300	230	242.2	9.5	2-447	6.99	227.97
2400	240	252.2	9.5	2-448	6.99	240.67
2500	250	262.2	9.5	2-449	6.99	253.37
2600	260	272.2	9.5	2-450	6.99	266.07
2700	270	282.2	9.5	2-450	6.99	266.07
2800	280	292.2	9.5	2-451	6.99	278.77
2900	290	302.2	9.5	2-452	6.99	291.47
3000	300	312.2	9.5	2-453	6.99	304.17
3100	310	322.2	9.5	2-454	6.99	316.87
3200	320	332.2	9.5	2-454	6.99	316.87
3300	330	342.2	9.5	2-455	6.99	329.57
3400	340	352.2	9.5	2-456	6.99	342.27
3500	350	362.2	9.5	2-457	6.99	354.97
3600	360	372.2	9.5	2-457	6.99	354.97
3700	370	382.2	9.5	2-458	6.99	367.67
3800	380	392.2	9.5	2-459	6.99	380.37
3900	390	402.2	9.5	2-460	6.99	393.07
4000	400	412.2	9.5	2-461	6.99	405.26

Further sizes on request.

The double-acting piston sealing set profile OA consists of a PTFE piston sealing ring and an elastomer O-ring as a preloading element.

Profile OA is particularly suitable for double-acting pneumatic pistons, e.g. in control cylinders, servo-assisted equipment and in quick-acting cylinders.

Advantages

- Due to application-optimized geometry and compounds suitable for use in lubricated as well as in oil-free air (after initial lubrication on assembly).
- Good sealing performance in extremely small assembly conditions.
- Can also be used for single-acting applications.
- Minimal break-away and dynamic friction and no stick-slip tendency ensures uniform motion even at low speeds.
- Good energy efficiency due to low friction.
- Assembly on one-part piston is possible.
- High temperature resistance assured by suitable O-ring compound selection.
- Adaptable to nearly all media thanks to high chemical resistance of the sealing ring and large O-ring compound selection.
- Short axial assembly length.
- Installation in closed and undercut housings.
- Available in diameters from 4 to 3000 mm.
- Machined small-volume series and samples available with short lead times.

Range of Application

Piston sealing set for pneumatic applications.

Operating pressure	≤ 16 bar
Operating temperature	-30 to +80 °C [1]
Surface speed	≤ 4.0 m/s

[1] For requirements outside of standard temperature range please contact our consultancy service for suitable O-ring compound.

Compounds

Sealing ring: Polon® 033, modified PTFE + 25 % carbon
O-ring: N0674, NBR elastomer with approx. 70 Shore A.

Installation

The grooves must be carefully cleaned and deburred. The cylinder bore must have a lead-in chamfer. When fitting the piston sealing ring there is always a risk that the ring may tilt and be sheared off by normal lead-in chamfers (see drawing no. 1). We therefore recommend that up to a cylinder diameter of 230 mm a lead-in chamfer according to drawing no. 2 or detail »A« is considered. In the case of smaller rings which are especially liable to bending we recommend an open-groove design for diameters smaller than 30 mm.

This seal should only be used in combination with guiding elements (e.g. profile F2).

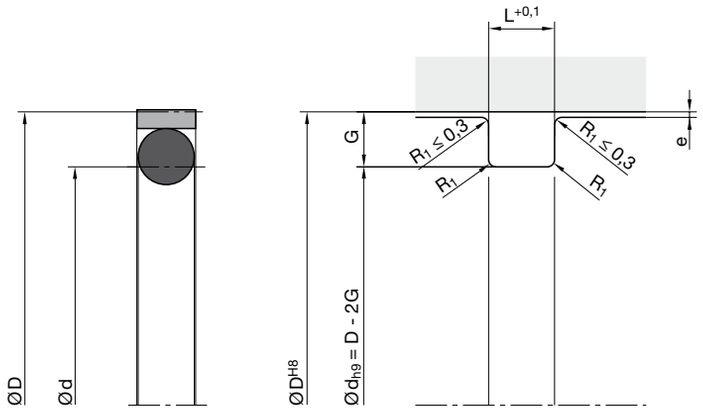

Housing dimensions

Series No.	Cross-section	O-ring cross-section (mm)	Recommended piston Ø range D (mm) ≥	<	Groove width L (mm)	Groove depth G (mm)	Gap e (mm)	Radius max. R_1 (mm)
01800	A	1.78	7	16	2.00	2.00	0.20	0.5
01800	B	2.62	16	27	2.85	3.00	0.25	0.5
01800	C	3.53	27	50	3.80	3.75	0.25	0.5
01800	D	5.33	50	130	5.60	6.25	0.50	0.9
01800	E	6.99	130	180	7.55	7.50	0.50	0.9
01800	F	6.99	180	240	7.55	9.00	0.75	0.9
01800	G	6.99	240	420	7.55	12.00	1.00	0.9

Ordering example

Piston diameter 40 mm

OA 0400 033 01801 C (40.0 x 32.5 x 3.8)

OA Profile
0400 Piston diameter x 10
033 Compound
01801 Series no. / Compound code O-ring:

01800	without O-ring		
01801	N0674 (NBR)	70±5 Shore A	-30 / +110 °C
01802	V0747 (FKM)	75±5 Shore A	-25 / +200 °C
01803	N0304 (NBR)	75±5 Shore A	-50 / +110 °C
01804	E0540 (EPDM)	80±5 Shore A	-40 / +150 °C
01805	N3578 (NBR)	75±5 Shore A	-30 / +110 °C
01806	N3588 (NBR)	90±5 Shore A	-20 / +110 °C

C Cross-section

Please note
For certain applications, it may be appropriate to use a non-standard cross-section - reduced or heavier. In these cases, please replace the standard cross-section code (in above example: “C”) by the one you require (for example “B” or “D”).

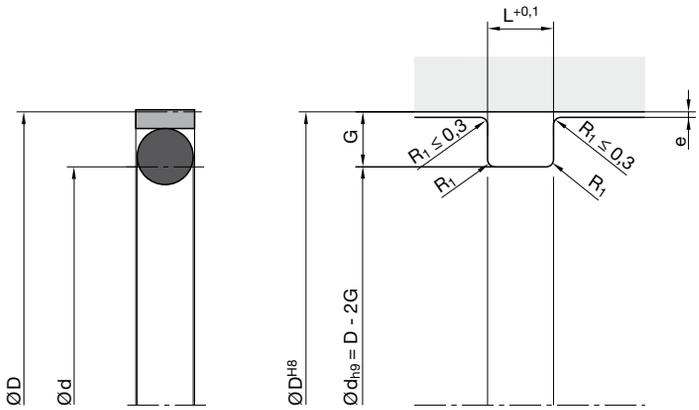

Standard range

Groove				O-ring		
Size	Ø d mm	Ø D mm	L mm	No.	CS mm	ID mm
0070	7	3.0	2.00	2-006	1.78	2.90
0080	8	4.0	2.00	2-007	1.78	3.68
0090	9	5.0	2.00	2-008	1.78	4.47
0100	10	6.0	2.00	2-010	1.78	6.07
0110	11	7.0	2.00	2-010	1.78	6.07
0120	12	8.0	2.00	2-011	1.78	7.65
0140	14	10.0	2.00	2-012	1.78	9.25
0160	16	10.0	2.85	2-110	2.62	9.19
0180	18	12.0	2.85	2-112	2.62	12.37
0190	19	13.0	2.85	2-112	2.62	12.37
0200	20	14.0	2.85	2-113	2.62	13.94
0220	22	16.0	2.85	2-114	2.62	15.54
0250	25	19.0	2.85	2-116	2.62	18.72
0280	28	20.5	3.80	2-211	3.53	20.22
0300	30	22.5	3.80	2-212	3.53	21.82
0320	32	24.5	3.80	2-214	3.53	24.99
0350	35	27.5	3.80	2-215	3.53	26.57
0360	36	28.5	3.80	2-216	3.53	28.17
0380	38	30.5	3.80	2-217	3.53	29.74
0400	40	32.5	3.80	2-219	3.53	32.92
0420	42	34.5	3.80	2-220	3.53	34.52
0450	45	37.5	3.80	2-221	3.53	37.69
0480	48	40.5	3.80	2-223	3.53	40.87
0500	50	37.5	5.60	2-325	5.33	37.47
0550	55	42.5	5.60	2-326	5.33	40.64
0600	60	47.5	5.60	2-328	5.33	46.99
0630	63	50.5	5.60	2-329	5.33	50.17
0650	65	52.5	5.60	2-329	5.33	50.17
0700	70	57.5	5.60	2-331	5.33	56.52
0740	74	61.5	5.60	2-332	5.33	59.69
0750	75	62.5	5.60	2-333	5.33	62.87
0800	80	67.5	5.60	2-334	5.33	66.04
0850	85	72.5	5.60	2-336	5.33	72.39
0900	90	77.5	5.60	2-337	5.33	75.57
0920	92	79.5	5.60	2-338	5.33	78.74
1000	100	87.5	5.60	2-340	5.33	85.09
1050	105	92.5	5.60	2-342	5.33	91.44
1100	110	97.5	5.60	2-344	5.33	97.79
1150	115	102.5	5.60	2-345	5.33	100.97
1200	120	107.5	5.60	2-347	5.33	107.32

Groove				O-ring		
Size	Ø d mm	Ø D mm	L mm	No.	CS mm	ID mm
1250	125	112.5	5.60	2-348	5.33	110.49
1300	130	115.0	7.55	2-425	6.99	113.67
1400	140	125.0	7.55	2-428	6.99	123.19
1500	150	135.0	7.55	2-431	6.99	132.72
1600	160	145.0	7.55	2-435	6.99	142.24
2000	200	182.0	7.55	2-441	6.99	177.17
2200	220	202.0	7.55	2-444	6.99	196.22

Further sizes on request.

The single-acting piston sealing set profile OG consists of a PTFE piston sealing ring and an elastomer O-ring as a preloading element.

The asymmetrical cross-section of the slipper ring is designed for best drag oil performance during stroke in both directions.

Profile OG is particularly suitable for single-acting pistons in control cylinders, in servo controlled systems, machine tools, quick acting cylinders.

The material combination of the slipper ring (PTFE) and the O-ring (elastomer) makes this product suitable for a wide range of applications, especially for aggressive media and/or high temperatures. Multiple compounds can alternatively be selected according to the individual application profile.

Advantages

- Good sealing performance in extremely small assembly conditions.
- Excellent wear resistance.
- Minimal break-away and dynamic friction and no stick-slip tendency ensures uniform motion even at low speeds.
- Good energy efficiency due to low friction.
- Insensitive to pressure peaks.
- High temperature resistance assured by suitable O-ring compound selection.
- High extrusion resistance.
- Adaptable to nearly all media thanks to high chemical resistance of the sealing ring and large O-ring compound selection.
- Dimensions according to ISO 7425-1.
- Also available as double-acting version.
- Installation in closed and undercut housings.
- Available in diameters from 4 to 3000 mm.
- Machined small-volume series and samples available with short lead times.

Range of Application

Operating pressure	≤ 400 bar
In case of reduced extrusion gap (H7/f7)	≤ 600 bar
Operating temperature	-30 to +100 °C [1]
Surface speed	≤ 4.0 m/s

[1] For requirements outside of standard temperature range please contact our consultancy service for adequate O-ring compound.

Compounds

Sealing ring: Polon® 052, modified PTFE + 40 % bronze
O-ring: N0674, NBR elastomer with approx. 70 Shore A.

Installation

This seal should only be used in combination with guiding elements (e.g. F3).

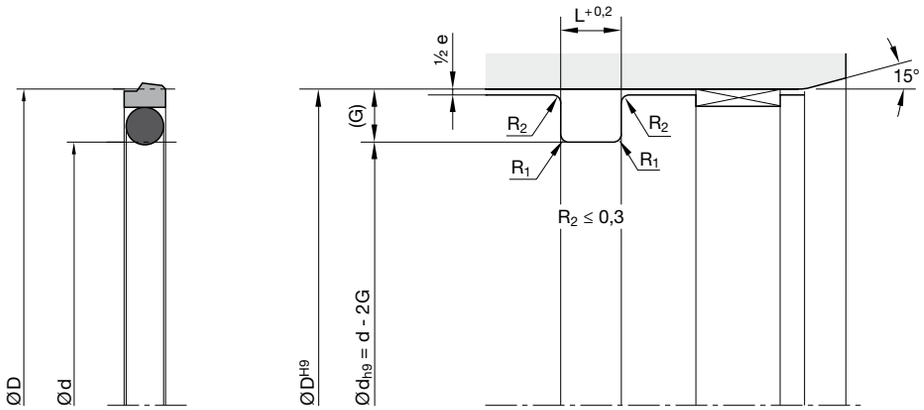

Housing dimensions

Series No.	Cross-section	O-ring cross-section (mm)	Recommended rod Ø range d (mm) ≥	<	Groove width L (mm)	Groove depth G (mm)	Gap max. 0–200 bar e (mm)	Gap max. 200–400 bar e (mm)	Radius max. R_1 (mm)	ISO[1)]
00270	A	1.78	8	17	2.2	2.45	0.6 - 0.4	0.4 - 0.2	0.5	
00270	B	2.62	17	27	3.2	3.65	0.8 - 0.5	0.5 - 0.3	0.5	
00270	C	3.53	27	60	4.2	5.35	0.8 - 0.5	0.5 - 0.3	0.5	
00270	D	5.33	60	200	6.3	7.55	1.0 - 0.6	0.6 - 0.4	0.9	
00270	E	6.99	200	256	8.1	10.25	1.0 - 0.6	0.6 - 0.4	0.9	
00270	F	6.99	256	670	8.1	12.00	1.2 - 0.7	0.7 - 0.5	0.9	
00270	G	8.40	670	1000	9.5	13.65	1.4 - 0.8	0.8 - 0.6	0.9	
00270	H	12.00	1000	-	13.8	19.00	1.4 - 0.8	0.8 - 0.6	0.9	
00270	K	1.78	8	17	2.2	2.50	0.6 - 0.4	0.4 - 0.2	0.5	•
00270	L	2.62	17	27	3.2	3.75	0.8 - 0.5	0.5 - 0.3	0.5	•
00270	M	3.53	27	60	4.2	5.50	0.8 - 0.5	0.5 - 0.3	0.5	•
00270	N	3.53	27	60	5.0	5.00	0.8 - 0.5	0.5 - 0.3	0.5	•
00270	O	5.33	60	200	6.3	7.75	1.0 - 0.6	0.6 - 0.4	0.9	•
00270	P	5.33	60	200	7.5	7.50	1.0 - 0.6	0.6 - 0.4	0.9	•
00270	Q	6.99	200	256	8.1	10.50	1.0 - 0.6	0.6 - 0.4	0.9	•
00270	R	6.99	256	670	8.1	12.25	1.2 - 0.7	0.7 - 0.5	0.9	•
00270	S	6.99	200	256	10.0	10.00	1.2 - 0.7	0.7 - 0.5	0.9	•
00270	T	6.99	256	670	12.5	12.50	1.2 - 0.7	0.7 - 0.5	0.9	•
00270	U	10.00	670	1000	12.5	15.00	1.4 - 0.8	0.8 - 0.6	0.9	•
00270	V	10.00	670	1000	15.0	15.00	1.4 - 0.8	0.8 - 0.6	0.9	•
00270	W	14.00	1000	-	20.0	20.00	1.4 - 0.8	0.8 - 0.6	0.9	•

1) Housing dimensions according to ISO 7425-1

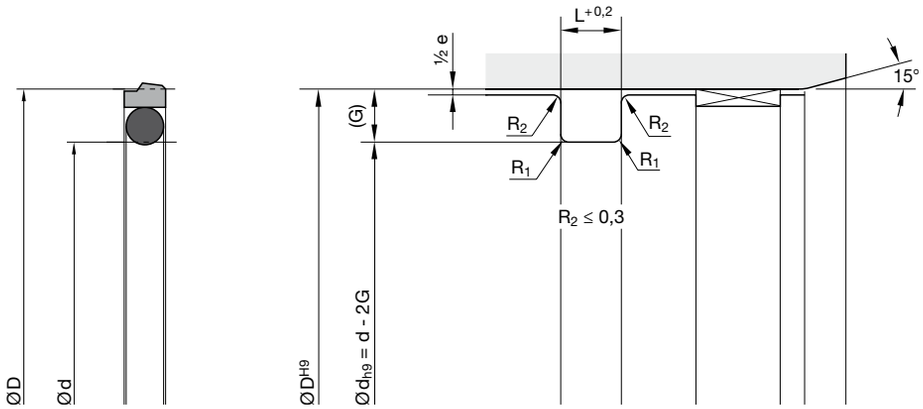

Ordering example

Piston diameter 80 mm

OG 0800 052 00271 D (80.0 x 64.9 x 6.3)

OG	Profile			
0800	Piston diameter x 10			
052	Compound			
00271	Series no. / Compound code O-ring:			
	00270	without O-ring		
	00271	N0674 (NBR)	70±5 Shore A	-30 / +110 °C
	00272	V0747 (FKM)	75±5 Shore A	-25 / +200 °C
	00273	N0304 (NBR)	75±5 Shore A	-50 / +110 °C
	00274	E0540 (EPDM)	80±5 Shore A	-40 / +150 °C
	00275	N3578 (NBR)	75±5 Shore A	-30 / +110 °C
	00276	N3588 (NBR)	90±5 Shore A	-20 / +110 °C
D	Cross-section			

Please note

For certain applications, it may be appropriate to use a non-standard cross-section - reduced or heavier. In these cases, please replace the standard cross-section code (in above example: "D") by the one you require (for example "C" or "E").

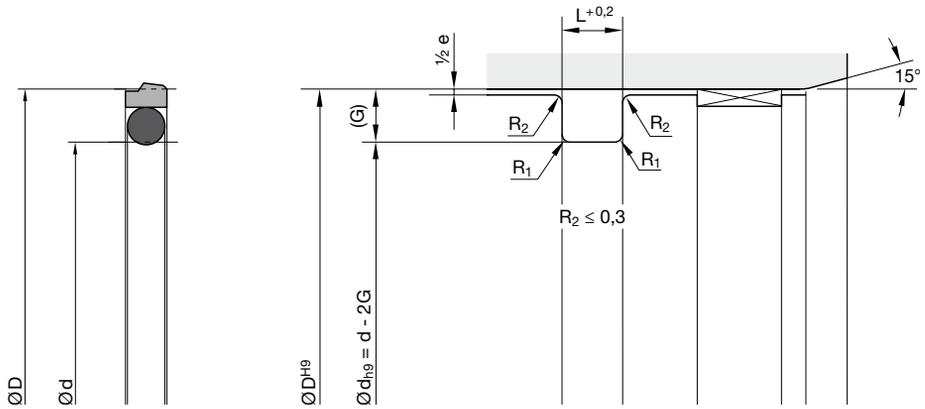

Standard range

Groove				O-ring			ISO[1]	Groove				O-ring			ISO[1]
Size	Ø d mm	Ø D mm	L mm	No.	CS mm	ID mm		Size	Ø d mm	Ø D mm	L mm	No.	CS mm	ID mm	
0080	8	3.1	2.2	2-006	1.78	2.90		1000	100	89.0	4.2	2-238	3.53	88.49	•
0080	8	3.1	2.2	2-006	1.78	2.90		1000	100	84.5	6.3	2-339	5.33	81.92	•
0100	10	5.1	2.2	2-008	1.78	4.47		1050	105	89.5	6.3	2-341	5.33	88.27	
0120	12	7.1	2.2	2-010	1.78	6.07		1100	110	94.5	6.3	2-343	5.33	94.62	
0150	15	7.5	3.2	2-109	2.62	7.59		1150	115	99.5	6.3	2-344	5.33	97.79	
0160	16	11.0	2.2	2-013	1.78	10.82	•	1200	120	104.5	6.3	2-346	5.33	104.14	
0160	16	8.5	3.2	2-109	2.62	7.59	•	1250	125	109.5	6.3	2-347	5.33	107.32	•
0180	18	10.5	3.2	2-110	2.62	9.19		1250	125	104.0	8.1	6-392	6.99	99.00	•
0200	20	15.0	2.2	2-015	1.78	14.00	•	1250	125	105.0	10.0	6-392	6.99	99.00	•
0200	20	12.5	3.2	2-111	2.62	10.77	•	1300	130	114.5	6.3	2-349	5.33	113.67	
0220	22	14.5	3.2	2-113	2.62	13.94		1350	135	114.0	8.1	2-425	6.99	113.67	
0250	25	17.5	3.2	2-115	2.62	17.12	•	1400	140	119.0	8.1	2-426	6.99	116.84	
0250	25	14.0	4.2	2-207	3.53	13.87	•	1450	145	124.0	8.1	2-428	6.99	123.19	
0250	25	15.0	5.0	2-208	3.53	15.47	•	1500	150	129.0	8.1	2-429	6.99	126.37	
0280	28	20.5	3.2	2-116	2.62	18.72		1550	155	134.0	8.1	2-431	6.99	132.72	
0300	30	22.5	3.2	2-118	2.62	21.89		1600	160	144.5	6.3	2-358	5.33	142.24	•
0320	32	24.5	3.2	2-119	2.62	23.47	•	1600	160	139.0	8.1	2-433	6.99	139.07	•
0320	32	21.0	4.2	2-211	3.53	20.22	•	1600	160	135.0	12.5	2-431	6.99	132.72	•
0320	32	22.0	5.0	2-212	3.53	21.82	•	1650	165	144.0	8.1	2-434	6.99	142.24	
0350	35	27.5	3.2	2-121	2.62	26.64		1700	170	149.0	8.1	2-436	6.99	148.59	
0400	40	32.5	3.2	2-124	2.62	31.42	•	1750	175	154.0	8.1	2-437	6.99	151.77	
0400	40	29.0	4.2	2-216	3.53	28.17	•	1800	180	159.0	8.1	2-438	6.99	158.12	
0400	40	30.0	5.0	2-217	3.53	29.74	•	1850	185	164.0	8.1	2-439	6.99	164.47	
0420	42	31.0	4.2	2-217	3.53	29.74		1900	190	169.0	8.1	2-439	6.99	164.47	
0450	45	34.0	4.2	2-219	3.53	32.92		1950	195	174.0	8.1	2-440	6.99	170.82	
0480	48	37.0	4.2	2-221	3.53	36.09		2000	200	184.5	6.3	2-366	5.33	183.52	•
0500	50	39.0	4.2	2-222	3.53	37.69	•	2000	200	179.0	8.1	2-441	6.99	177.17	•
0500	50	34.5	6.3	2-324	5.33	34.29	•	2000	200	175.0	12.5	2-440	6.99	170.82	•
0500	50	35.0	7.5	2-324	5.33	34.29	•	2100	210	189.0	8.1	2-442	6.99	183.52	
0520	52	41.0	4.2	2-223	3.53	40.87		2200	220	199.0	8.1	2-444	6.99	196.22	
0550	55	44.0	4.2	2-224	3.53	44.04		2300	230	209.0	8.1	2-445	6.99	202.57	
0600	60	49.0	4.2	2-225	3.53	47.22		2400	240	219.0	8.1	2-446	6.99	215.27	
0630	63	52.0	4.2	2-226	3.53	50.39	•	2500	250	229.0	8.1	2-447	6.99	227.97	•
0630	63	47.5	6.3	2-328	5.33	46.99	•	2500	250	225.5	8.1	2-447	6.99	227.97	•
0630	63	48.0	7.5	2-328	5.33	46.99	•	2600	260	239.0	8.1	2-447	6.99	227.97	
0650	65	54.0	4.2	2-227	3.53	53.57		2700	270	249.0	8.1	2-448	6.99	240.67	
0700	70	59.0	4.2	2-228	3.53	56.74		2800	280	259.0	8.1	2-449	6.99	253.37	
0800	80	69.0	4.2	2-232	3.53	69.44	•	2900	290	269.0	8.1	2-450	6.99	266.07	
0800	80	64.5	6.3	2-333	5.33	62.87	•	3000	300	279.0	8.1	2-451	6.99	278.77	
0850	85	69.5	6.3	2-335	5.33	69.22		3100	310	289.0	8.1	2-451	6.99	278.77	
0900	90	74.5	6.3	2-336	5.33	72.39		3200	320	299.0	8.1	2-452	6.99	291.47	•
0950	95	79.5	6.3	2-338	5.33	78.74		3200	320	295.5	8.1	2-452	6.99	291.47	•

1) ISO 7425-1 • Further sizes on request.

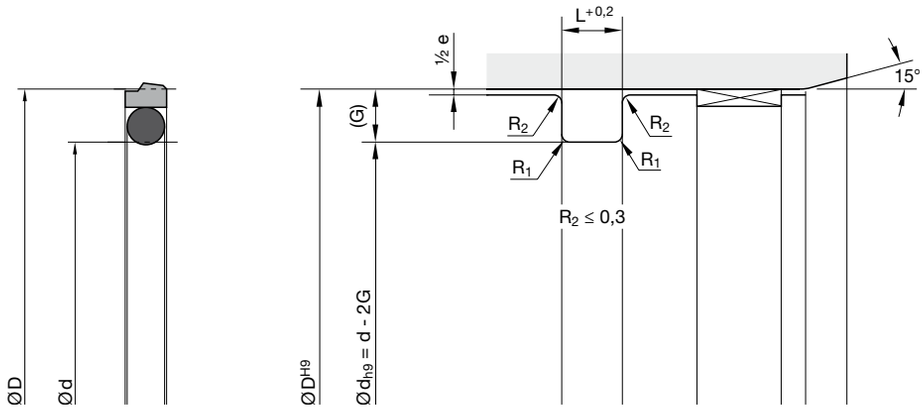

Groove				O-ring			ISO[1]
Size	Ø d mm	Ø D mm	L mm	No.	CS mm	ID mm	
3300	330	305.5	8.1	2-453	6.99	304.17	
3400	340	315.5	8.1	2-453	6.99	304.17	
3500	350	325.5	8.1	2-454	6.99	316.87	
3600	360	335.5	8.1	2-455	6.99	329.57	
3700	370	345.5	8.1	2-456	6.99	342.27	
3800	380	355.5	8.1	2-457	6.99	354.97	
3900	390	365.5	8.1	2-457	6.99	354.97	
4000	400	375.5	8.1	2-458	6.99	367.67	•
4000	400	370.0	12.5	6-672	10.00	364.00	•
4000	400	360.0	20.0	6-895	14.00	359.00	•
4100	410	385.5	8.1	2-459	6.99	380.37	
4200	420	395.5	8.1	2-460	6.99	393.07	
4300	430	405.5	8.1	2-461	6.99	405.26	
4400	440	415.5	8.1	2-461	6.99	405.26	
4500	450	425.5	8.1	2-462	6.99	417.96	
4600	460	435.5	8.1	2-463	6.99	430.66	
4700	470	445.5	8.1	2-464	6.99	443.36	
4800	480	455.5	8.1	2-465	6.99	456.06	
4900	490	465.5	8.1	2-465	6.99	456.06	
5000	500	475.5	8.1	2-466	6.99	468.76	•
5000	500	470.0	12.5	6-827	10.00	470.00	•
5200	520	495.5	8.1	2-468	6.99	494.16	
5500	550	525.5	8.1	2-469	6.99	506.86	
5700	570	545.5	8.1	2-470	6.99	532.26	
6000	600	575.5	8.1	2-471	6.99	557.66	
6200	620	595.5	8.1	2-472	6.99	582.68	
6400	640	615.5	8.1	2-473	6.99	608.08	
6500	650	622.0	9.5	-	8.40	635.00	
7000	700	672.0	9.5	-	8.40	660.00	
8000	800	772.0	9.5	-	8.40	770.00	
9000	900	872.0	9.5	-	8.40	888.00	

1) ISO 7425-1 • Further sizes on request.

The double-acting piston sealing set profile OE consists of a PTFE piston sealing ring and an elastomer O-ring as a preloading element.

Profile OE is particularly suitable for double-acting pistons in control cylinders, in servo-controlled systems, machine tools, quick acting and steering cylinders.

The material combination of the slipper ring (PTFE) and the O-ring (elastomer) makes this product suitable for a wide range of applications, especially for aggressive media and/or high temperatures. Multiple compounds can alternatively be selected according to the individual application profile.

Advantages

- Good sealing performance in extremely small assembly conditions.
- Can also be used for single-acting applications.
- Excellent wear resistance.
- Minimal break-away and dynamic friction and no stick-slip tendency ensures uniform motion even at low speeds.
- Good energy efficiency due to low friction.
- Assembly on one-part piston is possible.
- Insensitive to pressure peaks.
- High temperature resistance assured by suitable O-ring compound selection.
- High extrusion resistance.
- Adaptable to nearly all media thanks to high chemical resistance of the sealing ring and large O-ring compound selection.
- Dimensions according to ISO 7425-1.
- Short axial assembly length.
- Installation in closed and undercut housings.
- Available in diameters from 4 to 3000 mm.
- Machined small-volume series and samples available with short lead times.

Range of Application

Operating pressure	≤ 400 bar
in case of reduced extrusion gap (H7/f7) and large cross-sections	≤ 600 bar
Operating temperature	-30 to +100 °C [1]
Surface speed	≤ 4.0 m/s

[1] For requirements outside of standard temperature range please contact our consultancy service for suitable O-ring compound.

Compounds

Sealing ring: Polon® 052, modified PTFE + 40 % bronze
O-ring: N0674, NBR elastomer with approx. 70 Shore A.

Installation

This seal should only be used in combination with guiding elements (e.g. F3).

Further sizes on request.

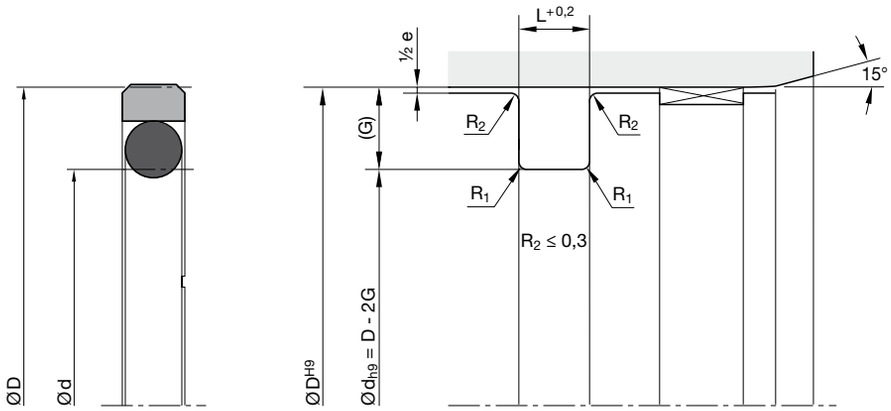

Housing dimensions

Series No.	Cross-section	O-ring cross-section (mm)	Recommended rod Ø range d (mm)		Groove width L (mm)	Groove depth G (mm)	Gap max. 0–200 bar e (mm)	Gap max. 200–400 bar e (mm)	Radius max. R_1 (mm)	ISO[1)]
			≥	<						
00210	A	1.78	8	15	2.2	2.45	0.6 - 0.4	0.4 - 0.2	0.5	
00210	B	2.62	15	40	3.2	3.75	0.8 - 0.5	0.5 - 0.3	0.5	
00210	C	3.53	40	80	4.2	5.50	0.8 - 0.5	0.5 - 0.3	0.5	
00210	D	5.33	80	133	6.3	7.75	1.0 - 0.6	0.6 - 0.4	0.9	
00210	E	6.99	133	330	8.1	10.50	1.0 - 0.6	0.6 - 0.4	0.9	
00210	F	6.99	330	670	8.1	12.25	1.2 - 0.7	0.7 - 0.5	0.9	
00210	G	8.40	670	1000	9.5	14.00	1.4 - 0.8	0.8 - 0.6	0.9	
00210	H	12.00	1000	-	13.8	19.00	1.4 - 0.8	0.8 - 0.6	0.9	
00210	K	1.78	8	15	2.2	2.50	0.6 - 0.4	0.4 - 0.2	0.5	•
00210	L	2.62	15	40	3.2	3.75	0.8 - 0.5	0.5 - 0.3	0.5	•
00210	M	3.53	40	80	4.2	5.50	0.8 - 0.5	0.5 - 0.3	0.5	•
00210	N	3.53	40	80	5.0	5.00	0.8 - 0.5	0.5 - 0.3	0.5	•
00210	O	5.33	80	133	6.3	7.75	1.0 - 0.6	0.6 - 0.4	0.9	•
00210	P	5.33	80	133	7.5	7.50	1.0 - 0.6	0.6 - 0.4	0.9	•
00210	Q	6.99	133	330	8.1	10.50	1.0 - 0.6	0.6 - 0.4	0.9	•
00210	R	6.99	330	670	8.1	12.25	1.2 - 0.7	0.7 - 0.5	0.9	•
00210	S	6.99	133	330	10.0	10.00	1.2 - 0.7	0.7 - 0.5	0.9	•
00210	T	6.99	330	670	12.5	12.50	1.2 - 0.7	0.7 - 0.5	0.9	•
00210	U	10.00	670	1000	12.5	15.00	1.4 - 0.8	0.8 - 0.6	0.9	•
00210	V	10.00	670	1000	15.0	15.00	1.4 - 0.8	0.8 - 0.6	0.9	•
00210	W	14.00	1000	-	20.0	20.00	1.4 - 0.8	0.8 - 0.6	0.9	•

1) Housing dimensions according to ISO 7425-1

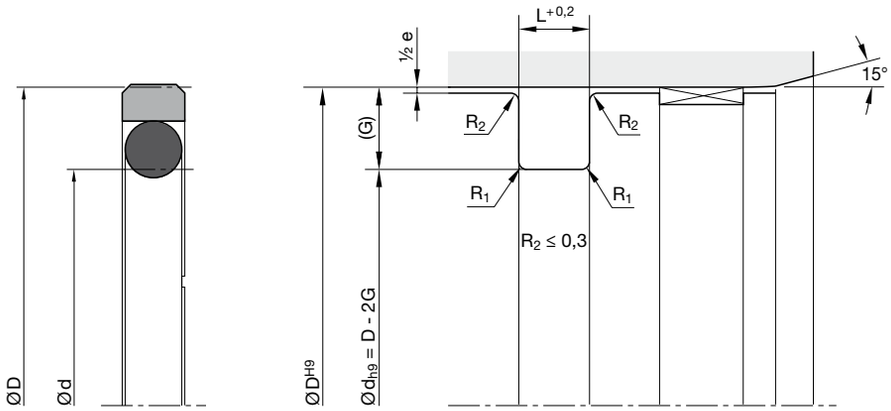

Ordering example

Piston diameter 80 mm

OE 0800 052 00211 D (80.0 x 64.5 x 6.3)

OE	Profile			
0800	Piston diameter x 10			
052	Compound			
00211	Series no. / Compound code O-ring:			
	00210	without O-ring		
	00211	N0674 (NBR)	70±5 Shore A	-30 / +110 °C
	00212	V0747 (FKM)	75±5 Shore A	-25 / +200 °C
	00213	N0304 (NBR)	75±5 Shore A	-50 / +110 °C
	00214	E0540 (EPDM)	80±5 Shore A	-40 / +150 °C
	00215	N3578 (NBR)	75±5 Shore A	-30 / +110 °C
	00216	N3588 (NBR)	90±5 Shore A	-20 / +110 °C
D	Cross-section			

Please note

For certain applications, it may be appropriate to use a non-standard cross-section - reduced or heavier. In these cases, please replace the standard cross-section code (in above example: "D") by the one you require (for example "C" or "E").

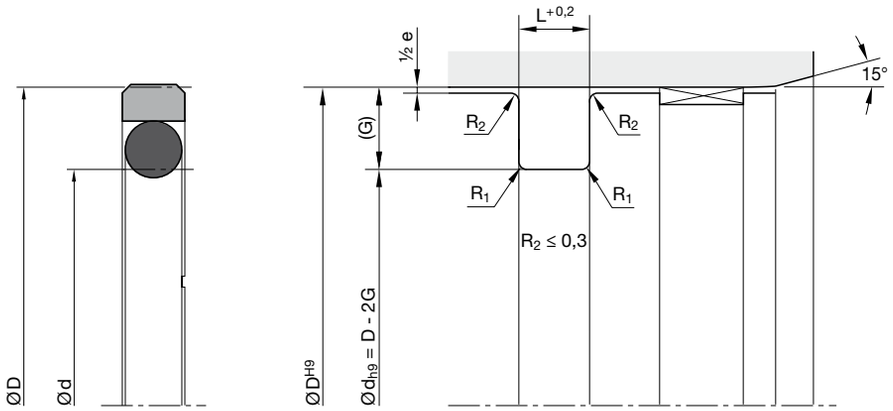

Standard range

Groove				O-ring			ISO[1]
Size	Ø D mm	Ø d mm	L mm	No.	CS mm	ID mm	
0080	8	3.1	2.2	2-006	1.78	2.90	
0080	8	3.1	2.2	2-006	1.78	2.90	
0100	10	5.1	2.2	2-008	1.78	4.47	
0120	12	7.1	2.2	2-010	1.78	6.07	
0150	15	7.5	3.2	2-109	2.62	7.59	
0160	16	11.0	2.2	2-013	1.78	10.82	•
0160	16	8.5	3.2	2-109	2.62	7.59	•
0180	18	10.5	3.2	2-110	2.62	9.19	
0200	20	15.0	2.2	2-015	1.78	14.00	•
0200	20	12.5	3.2	2-111	2.62	10.77	•
0220	22	14.5	3.2	2-113	2.62	13.94	
0250	25	17.5	3.2	2-115	2.62	17.12	•
0250	25	14.0	4.2	2-207	3.53	13.87	•
0250	25	15.0	5.0	2-208	3.53	15.47	•
0280	28	20.5	3.2	2-116	2.62	18.72	
0300	30	22.5	3.2	2-118	2.62	21.89	
0320	32	24.5	3.2	2-119	2.62	23.47	•
0320	32	21.0	4.2	2-211	3.53	20.22	•
0320	32	22.0	5.0	2-212	3.53	21.82	•
0350	35	27.5	3.2	2-121	2.62	26.64	
0400	40	32.5	3.2	2-124	2.62	31.42	•
0400	40	29.0	4.2	2-216	3.53	28.17	•
0400	40	30.0	5.0	2-217	3.53	29.74	•
0420	42	31.0	4.2	2-217	3.53	29.74	
0450	45	34.0	4.2	2-219	3.53	32.92	
0480	48	37.0	4.2	2-221	3.53	36.09	
0500	50	39.0	4.2	2-222	3.53	37.69	•
0500	50	34.5	6.3	2-324	5.33	34.29	•
0500	50	35.0	7.5	2-324	5.33	34.29	•
0520	52	41.0	4.2	2-223	3.53	40.87	
0550	55	44.0	4.2	2-224	3.53	44.04	
0600	60	49.0	4.2	2-225	3.53	47.22	
0630	63	52.0	4.2	2-226	3.53	50.39	•
0630	63	47.5	6.3	2-328	5.33	46.99	•
0630	63	48.0	7.5	2-328	5.33	46.99	•
0650	65	54.0	4.2	2-227	3.53	53.57	
0700	70	59.0	4.2	2-228	3.53	56.74	
0800	80	69.0	4.2	2-232	3.53	69.44	•
0800	80	64.5	6.3	2-333	5.33	62.87	•
0850	85	69.5	6.3	2-335	5.33	69.22	
0900	90	74.5	6.3	2-336	5.33	72.39	
0950	95	79.5	6.3	2-338	5.33	78.74	

Groove				O-ring			ISO[1]
Size	Ø D mm	Ø d mm	L mm	No.	CS mm	ID mm	
1000	100	89.0	4.2	2-238	3.53	88.49	•
1000	100	84.5	6.3	2-339	5.33	81.92	•
1050	105	89.5	6.3	2-341	5.33	88.27	
1100	110	94.5	6.3	2-343	5.33	94.62	
1150	115	99.5	6.3	2-344	5.33	97.79	
1200	120	104.5	6.3	2-346	5.33	104.14	
1250	125	109.5	6.3	2-347	5.33	107.32	•
1250	125	104.0	8.1	6-392	6.99	99.00	•
1250	125	105.0	10.0	6-392	6.99	99.00	•
1300	130	114.5	6.3	2-349	5.33	113.67	
1350	135	114.0	8.1	2-425	6.99	113.67	
1400	140	119.0	8.1	2-426	6.99	116.84	
1450	145	124.0	8.1	2-428	6.99	123.19	
1500	150	129.0	8.1	2-429	6.99	126.37	
1550	155	134.0	8.1	2-431	6.99	132.72	
1600	160	144.5	6.3	2-358	5.33	142.24	•
1600	160	139.0	8.1	2-433	6.99	139.07	•
1600	160	135.0	12.5	2-431	6.99	132.72	•
1650	165	144.0	8.1	2-434	6.99	142.24	
1700	170	149.0	8.1	2-436	6.99	148.59	
1750	175	154.0	8.1	2-437	6.99	151.77	
1800	180	159.0	8.1	2-438	6.99	158.12	
1850	185	164.0	8.1	2-439	6.99	164.47	
1900	190	169.0	8.1	2-439	6.99	164.47	
1950	195	174.0	8.1	2-440	6.99	170.82	
2000	200	184.5	6.3	2-366	5.33	183.52	•
2000	200	179.0	8.1	2-441	6.99	177.17	•
2000	200	175.0	12.5	2-440	6.99	170.82	•
2100	210	189.0	8.1	2-442	6.99	183.52	
2200	220	199.0	8.1	2-444	6.99	196.22	
2300	230	209.0	8.1	2-445	6.99	202.57	
2400	240	219.0	8.1	2-446	6.99	215.27	
2500	250	229.0	8.1	2-447	6.99	227.97	•
2500	250	225.5	8.1	2-447	6.99	227.97	•
2600	260	239.0	8.1	2-447	6.99	227.97	
2700	270	249.0	8.1	2-448	6.99	240.67	
2800	280	259.0	8.1	2-449	6.99	253.37	
2900	290	269.0	8.1	2-450	6.99	266.07	
3000	300	279.0	8.1	2-451	6.99	278.77	
3100	310	289.0	8.1	2-451	6.99	278.77	
3200	320	299.0	8.1	2-452	6.99	291.47	•
3200	320	295.5	8.1	2-452	6.99	291.47	•

1) ISO 7425-1 • Further sizes on request.

Polon® Piston sealing set (double acting)

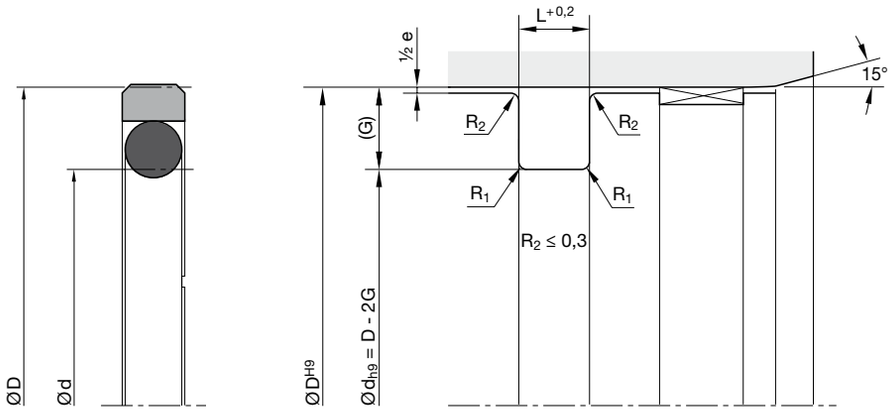

Groove				O-ring			ISO[1]
Size	Ø D mm	Ø d mm	L mm	No.	CS mm	ID mm	
3300	330	305.5	8.1	2-453	6.99	304.17	
3400	340	315.5	8.1	2-453	6.99	304.17	
3500	350	325.5	8.1	2-454	6.99	316.87	
3600	360	335.5	8.1	2-455	6.99	329.57	
3700	370	345.5	8.1	2-456	6.99	342.27	
3800	380	355.5	8.1	2-457	6.99	354.97	
3900	390	365.5	8.1	2-457	6.99	354.97	
4000	400	375.5	8.1	2-458	6.99	367.67	•
4000	400	370.0	12.5	6-672	10.00	364.00	•
4000	400	360.0	20.0	6-895	14.00	359.00	•
4100	410	385.5	8.1	2-459	6.99	380.37	
4200	420	395.5	8.1	2-460	6.99	393.07	
4300	430	405.5	8.1	2-461	6.99	405.26	
4400	440	415.5	8.1	2-461	6.99	405.26	
4500	450	425.5	8.1	2-462	6.99	417.96	
4600	460	435.5	8.1	2-463	6.99	430.66	
4700	470	445.5	8.1	2-464	6.99	443.36	
4800	480	455.5	8.1	2-465	6.99	456.06	
4900	490	465.5	8.1	2-465	6.99	456.06	
5000	500	475.5	8.1	2-466	6.99	468.76	•
5000	500	470.0	12.5	6-827	10.00	470.00	•
5200	520	495.5	8.1	2-468	6.99	494.16	
5500	550	525.5	8.1	2-469	6.99	506.86	
5700	570	545.5	8.1	2-470	6.99	532.26	
6000	600	575.5	8.1	2-471	6.99	557.66	
6200	620	595.5	8.1	2-472	6.99	582.68	
6400	640	615.5	8.1	2-473	6.99	608.08	
6500	650	622.0	9.5	-	8.40	635.00	
7000	700	672.0	9.5	-	8.40	660.00	
8000	800	772.0	9.5	-	8.40	770.00	
9000	900	872.0	9.5	-	8.40	888.00	

1) ISO 7425-1 • Further sizes on request.

The double-acting profile CP Caveseal® piston sealing set consists of a PTFE piston sealing ring and an elastomer O-ring as a preloading element.

Profile sealing set is appropriate for dynamic applications as an alternative to an O-ring in situations where sealing performance and friction have to be optimized.

The material combination of the slipper ring (PTFE) and the O-ring (elastomer) makes this product suitable for a wide range of applications, especially for aggressive media and/or high temperatures. Multiple compounds can alternatively be selected according to the individual application profile.

Advantages

- Good sealing performance in extremely small assembly conditions.
- Excellent wear resistance.
- Minimal break-away and dynamic friction and no stick-slip tendency ensures uniform motion even at low speeds.
- Good energy efficiency due to low friction.
- Assembly on one-part piston is possible.
- High temperature resistance assured by suitable O-ring compound selection.
- Adaptable to nearly all media thanks to high chemical resistance of the sealing ring and large O-ring compound selection.
- Short axial assembly length.
- Short radial assembly depth.
- Installation in closed and undercut housings.
- Available in diameters from 4 to 3000 mm.
- Can be used in existing O-ring grooves.
- Machined small-volume series and samples available with short lead times.

Range of Application

The CP profile range has been designed exclusively to replace standard O-rings. For dynamic applications we recommend our OA (pneumatics) or OE (hydraulics) profile ranges.

Operating pressure	≤ 16 bar
Operating temperature	-30 to +80 °C [1)]
Surface speed	≤ 4.0 m/s

[1)] For requirements outside of standard temperature range please contact our consultancy service for suitable O-ring compound.

Compounds

Sealing ring: Polon® 012, modified PTFE
O-ring: N0674, NBR elastomer with approx. 70 Shore A

Installation

For design modifications of the groove, please contact our consultancy service.
This seal should only be used in combination with guiding elements (e.g. F3).

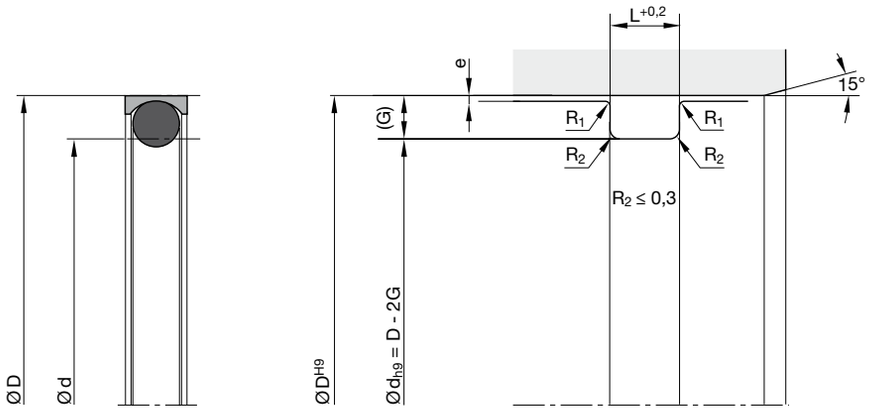

Housing dimensions

Series No.	Cross-section	O-ring cross-section (mm)	Recommended piston Ø range D (mm)		Groove width L (mm)	Groove depth G (mm)	Gap e (mm)	Radius max. R_1 (mm)
			≥	<				
08400	A	1.78	8	14	2.4	1.45	0.15	0.5
08400	B	2.62	14	25	3.6	2.25	0.20	0.5
08400	C	3.53	25	46	4.8	3.10	0.20	0.5
08400	D	5.33	46	125	7.1	4.70	0.25	0.9
08400	E	6.99	125	400	9.5	6.10	0.30	0.9

Ordering example

Piston diameter 80 mm

CP 0800 012 08401 D (80 x 70.6 x 7.1)

CP Profile
0800 Piston diameter x 10
012 Compound
08401 Series no. / Compound code O-ring:

08400	without O-ring		
08401	N0674 (NBR)	70±5 Shore A	-30 / +110 °C
08402	V0747 (FKM)	75±5 Shore A	-25 / +200 °C
08403	N0304 (NBR)	75±5 Shore A	-50 / +110 °C
08404	E0540 (EPDM)	80±5 Shore A	-40 / +150 °C
08405	N3578 (NBR)	75±5 Shore A	-30 / +110 °C
08406	N3588 (NBR)	90±5 Shore A	-20 / +110 °C

D Cross-section

Please note
For certain applications, it may be appropriate to use a non-standard cross-section – reduced or heavier.
In these cases, please replace the standard cross-section code (in above example: “D”) by the one you require (for example “C” or “E”).

Caveseal® Piston sealing set (double-acting)

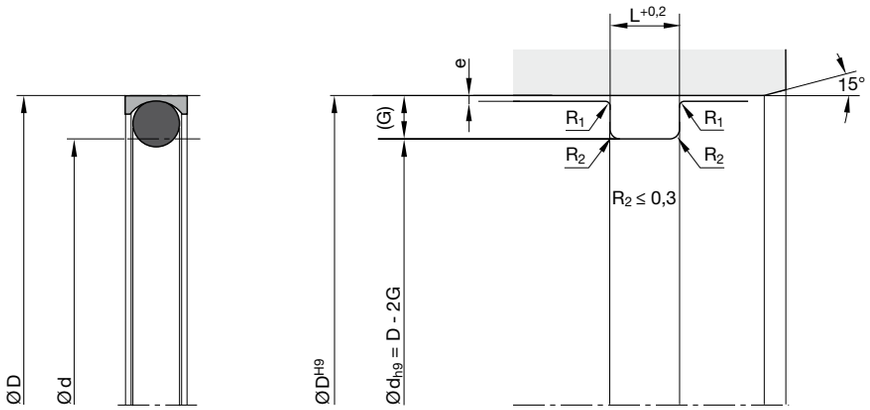

Standard range

Groove				O-ring		
Size	Ø D mm	Ø d mm	L mm	No.	CS mm	ID mm
0080	8	5.1	2.4	2-008	1.78	4.47
0100	10	7.1	2.4	2-010	1.78	6.07
0120	12	9.1	2.4	2-011	1.78	7.65
0150	15	10.5	3.6	2-110	2.62	9.19
0160	16	11.5	3.6	2-111	2.62	10.77
0180	18	13.5	3.6	2-112	2.62	12.37
0200	20	15.5	3.6	2-114	2.62	15.54
0220	22	17.5	3.6	2-115	2.62	17.12
0240	24	19.5	3.6	2-116	2.62	18.72
0250	25	18.8	4.8	2-209	3.53	17.04
0254	25.4	19.2	4.8	2-210	3.53	18.64
0280	28	21.8	4.8	2-212	3.53	21.82
0300	30	23.8	4.8	2-213	3.53	23.39
0320	32	25.8	4.8	2-214	3.53	24.99
0350	35	28.8	4.8	2-216	3.53	28.17
0400	40	33.8	4.8	2-219	3.53	32.92
0420	42	35.8	4.8	2-220	3.53	34.52
0450	45	38.8	4.8	2-222	3.53	37.69
0480	48	38.6	7.1	2-325	5.33	37.47
0500	50	40.6	7.1	2-326	5.33	40.64
0508	50.8	41.4	7.1	2-326	5.33	40.64
0520	52	42.6	7.1	2-326	5.33	40.64
0550	55	45.6	7.1	2-327	5.33	43.82
0600	60	50.6	7.1	2-329	5.33	50.17
0630	63	53.6	7.1	2-330	5.33	53.34
0650	65	55.6	7.1	2-330	5.33	53.34
0700	70	60.6	7.1	2-332	5.33	59.69
0750	75	65.6	7.1	2-333	5.33	62.87
0800	80	70.6	7.1	2-335	5.33	69.22
0850	85	75.6	7.1	2-337	5.33	75.57
0900	90	80.6	7.1	2-338	5.33	78.74
0950	95	85.6	7.1	2-340	5.33	85.09
1000	100	90.6	7.1	2-341	5.33	88.27
1050	105	95.6	7.1	2-343	5.33	94.62
1100	110	100.6	7.1	2-344	5.33	97.79
1150	115	105.6	7.1	2-346	5.33	104.14
1200	120	110.6	7.1	2-348	5.33	110.49
1250	125	112.8	9.5	2-425	6.99	113.67
1300	130	117.8	9.5	2-426	6.99	116.84
1350	135	122.8	9.5	2-427	6.99	120.02
1400	140	127.8	9.5	2-429	6.99	126.37
1450	145	132.8	9.5	2-430	6.99	129.54

Groove				O-ring		
Size	Ø D mm	Ø d mm	L mm	No.	CS mm	ID mm
1500	150	137.8	9.5	2-432	6.99	135.89
1550	155	142.8	9.5	2-433	6.99	133.97
1600	160	147.8	9.5	2-435	6.99	145.42
1650	165	152.8	9.5	2-437	6.99	151.77
1700	170	157.8	9.5	2-437	6.99	151.77
1750	175	162.8	9.5	2-438	6.99	158.12
1800	180	167.8	9.5	2-439	6.99	164.47
1900	190	177.8	9.5	2-441	6.99	177.17
2000	200	187.8	9.5	2-442	6.99	183.52
2100	210	197.8	9.5	2-444	6.99	196.22
2200	220	207.8	9.5	2-445	6.99	202.57
2300	230	217.8	9.5	2-446	6.99	215.27
2400	240	227.8	9.5	2-447	6.99	227.97
2500	250	237.8	9.5	2-447	6.99	227.97
2600	260	247.8	9.5	2-448	6.99	240.67
2700	270	257.8	9.5	2-449	6.99	253.37
2800	280	267.8	9.5	2-450	6.99	266.07
2900	290	277.8	9.5	2-450	6.99	266.07
3000	300	287.8	9.5	2-451	6.99	278.77
3100	310	297.8	9.5	2-452	6.99	291.47
3200	320	307.8	9.5	2-453	6.99	304.17
3300	330	317.8	9.5	2-454	6.99	316.87
3400	340	327.8	9.5	2-454	6.99	316.87
3500	350	337.8	9.5	2-455	6.99	329.57
3600	360	347.8	9.5	2-456	6.99	342.27
3700	370	357.8	9.5	2-457	6.99	354.97
3800	380	367.8	9.5	2-458	6.99	367.67
3900	390	377.8	9.5	2-458	6.99	367.67
4000	400	387.8	9.5	2-459	6.99	380.37

Further sizes on request.

The function of wiper rings is to prevent dust, dirt, grains of sand and metal swarf from penetrating into axially moving rods and plungers. Thus the development of scratches is largely prevented, guiding elements and seals are protected and the working life of the sealing system is extended.

Profile AT consists of a PTFE wiper ring and an elastomer O-ring as a preloading element.

The material combination of the slipper ring (PTFE) and the O-ring (elastomer) makes this product suitable for a wide range of applications, especially for aggressive media and/or high temperatures. Multiple compounds can alternatively be selected according to the individual application profile.

Advantages

- Excellent wear resistance.
- Minimal break-away and dynamic friction and no stick-slip tendency ensures uniform motion even at low speeds.
- Good energy efficiency due to low friction.
- High temperature resistance assured by suitable O-ring compound selection.
- Adaptable to nearly all media thanks to high chemical resistance of the sealing ring and large O-ring compound selection.
- Dimensions according to ISO 6195, Type D
- Installation in closed and undercut housings.
- Available in diameters from 4 to 3000 mm.
- Machined small-volume series and samples available with short lead times.

Range of Application

Operating temperature	-30 to +100 °C [1)]
Surface speed	≤ 4.0 m/s

[1)] For requirements outside of standard temperature range please contact our consultancy service for suitable O-ring compound.

Compounds

Wiper ring: Polon® 012, modified PTFE
O-ring: N0674, NBR elastomer with approx. 70 Shore A

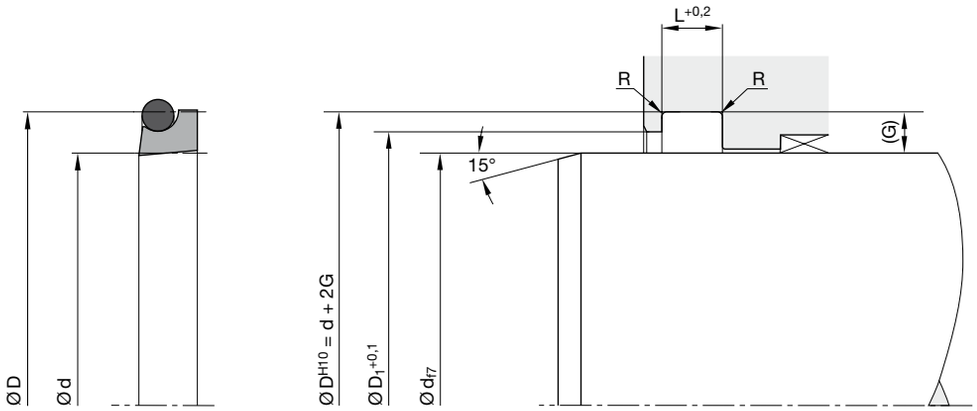

Housing dimensions

Series No.	Cross-section	O-ring cross-section (mm)	Recommended rod Ø range d (mm)		Groove width L (mm)	Groove depth G (mm)	Retainer ring Ø D_1 (mm)	Radius max. R (mm)
			≥	<				
00580	A	1.78	6	12	3.7	2.4	d + 2.7	0.4
00580	B	2.62	12	65	5.0	3.4	d + 3.5	0.4
00580	C	3.53	65	250	6.0	4.4	d + 4.0	0.4
00580	D	5.33	250	420	8.4	6.1	d + 4.5	0.4
00580	E	6.99	420	650	11.0	8.0	d + 5.2	0.4
00580	G	8.40	650	1000	14.0	10.0	d + 6.6	0.4

Ordering example

Rod diameter 80 mm

AT 0800 012 00581 C (80.0 x 88.8 x 6.0)

AT Profile
0800 Rod diameter x 10
012 Compound
00581 Series no. / Compound code O-ring:

00580	without O-ring		
00581	N0674 (NBR)	70±5 Shore A	-30 / +110 °C
00582	V0747 (FKM)	75±5 Shore A	-25 / +200 °C
00583	N0304 (NBR)	75±5 Shore A	-50 / +110 °C
00584	E0540 (EPDM)	80±5 Shore A	-40 / +150 °C
00585	N3578 (NBR)	75±5 Shore A	-30 / +110 °C
00586	N3588 (NBR)	90±5 Shore A	-20 / +110 °C

C Cross-section

Please note
For certain applications, it may be appropriate to use a nonstandard cross-section – reduced or heavier. In these cases, please replace the standard cross-section code (in above example: “C”) by the one you require (for example “B” or “D”).

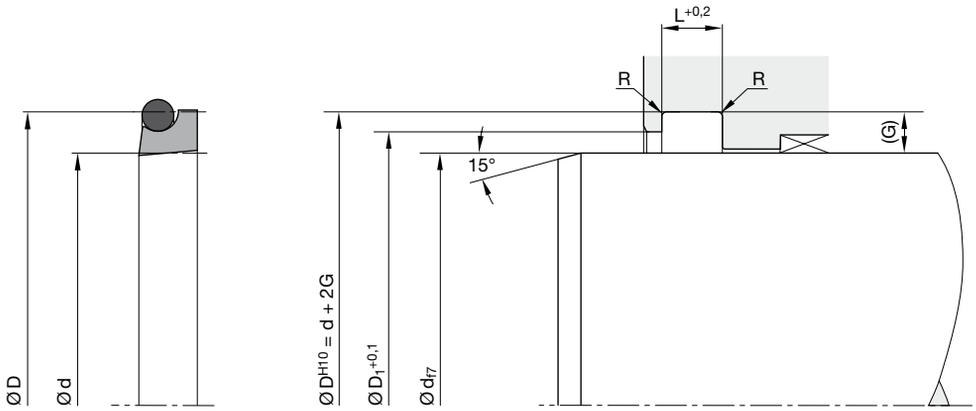

Standard range

Size	Groove Ø d mm	Ø D mm	Ø D_1 mm	L mm	O-ring No.	CS mm	ID mm	ISO 1)
0040	4	8.8	6.7	3.7	2-009	1.78	5.28	•
0050	5	9.8	7.7	3.7	2-010	1.78	6.07	•
0080	8	12.8	10.7	3.7	2-012	1.78	9.25	•
0100	10	14.8	12.7	3.7	2-013	1.78	10.82	•
0120	12	18.8	15.5	5.0	2-113	2.62	13.94	•
0140	14	20.8	17.5	5.0	2-114	2.62	15.54	•
0150	15	21.8	18.5	5.0	2-115	2.62	17.12	
0180	18	24.8	21.5	5.0	2-117	2.62	20.29	•
0200	20	26.8	23.5	5.0	2-118	2.62	21.89	•
0240	24	30.8	27.5	5.0	2-120	2.62	25.07	
0250	25	31.8	28.5	5.0	2-121	2.62	26.64	•
0280	28	34.8	31.5	5.0	2-123	2.62	29.82	•
0300	30	36.8	33.5	5.0	2-124	2.62	31.42	
0320	32	38.8	35.5	5.0	2-126	2.62	34.59	•
0350	35	41.8	38.5	5.0	2-127	2.62	36.17	
0380	38	44.8	41.5	5.0	2-130	2.62	40.94	
0400	40	46.8	43.5	5.0	2-131	2.62	42.52	•
0420	42	48.8	45.5	5.0	2-132	2.62	44.12	
0450	45	51.8	48.5	5.0	2-134	2.62	47.29	•
0480	48	54.8	51.5	5.0	2-136	2.62	50.47	
0500	50	56.8	53.5	5.0	2-137	2.62	52.07	•
0550	55	61.8	58.5	5.0	2-140	2.62	56.82	
0600	60	66.8	63.5	5.0	2-143	2.62	61.60	
0650	65	73.8	69.0	6.0	2-231	3.53	66.27	
0700	70	78.8	74.0	6.0	2-233	3.53	72.62	•
0750	75	83.8	79.0	6.0	2-234	3.53	75.79	
0800	80	88.8	84.0	6.0	2-236	3.53	82.14	•
0850	85	93.8	89.0	6.0	2-237	3.53	85.32	
0900	90	98.8	94.0	6.0	2-239	3.53	91.67	•
0950	95	103.8	99.0	6.0	2-241	3.53	98.02	
1000	100	108.8	104.0	6.0	2-242	3.53	101.19	•
1100	110	118.8	114.0	6.0	2-245	3.53	110.72	•
1200	120	128.8	124.0	6.0	2-249	3.53	123.42	
1250	125	133.8	129.0	6.0	2-250	3.53	126.59	•
1300	130	138.8	134.0	6.0	2-252	3.53	132.94	
1400	140	148.8	144.0	6.0	2-255	3.53	142.47	
1500	150	158.8	154.0	6.0	2-258	3.53	151.99	
1600	160	168.8	164.0	6.0	2-260	3.53	164.69	
1700	170	178.8	174.0	6.0	2-261	3.53	171.04	
1750	175	183.8	179.0	6.0	2-262	3.53	177.39	
1800	180	188.8	184.0	6.0	2-263	3.53	183.74	
1900	190	198.8	194.0	6.0	2-264	3.53	190.09	

1) ISO 6195 Type D • Further sizes on request.

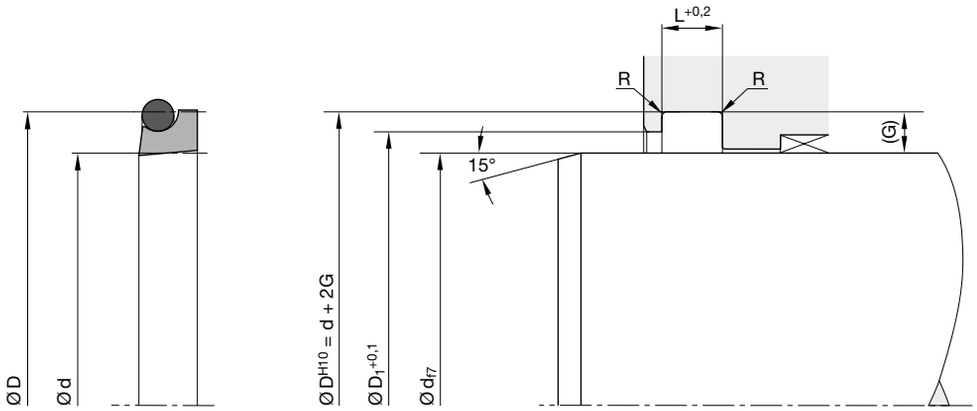

Size	Groove Ø d mm	Ø D mm	Ø D_1 mm	L mm	O-ring No.	CS mm	ID mm	ISO 1)
1950	195	203.8	199.0	6.0	2-265	3.53	196.44	
2000	200	208.8	204.0	6.0	2-266	3.53	202.79	
2100	210	218.8	214.0	6.0	2-267	3.53	209.14	
2200	220	228.8	224.0	6.0	2-269	3.53	221.84	
2300	230	238.8	234.0	6.0	2-271	3.53	234.54	
2400	240	248.8	244.0	6.0	2-272	3.53	240.89	
2500	250	258.8	254.0	6.0	2-274	3.53	253.59	•
2600	260	272.2	264.5	8.4	2-378	5.33	266.07	
2700	270	282.2	274.5	8.4	2-379	5.33	278.77	
2800	280	292.2	284.5	8.4	2-379	5.33	278.77	•
2900	290	302.2	294.5	8.4	2-380	5.33	291.47	
3000	300	312.2	304.5	8.4	2-381	5.33	304.17	
3100	310	322.2	314.5	8.4	2-381	5.33	304.17	
3200	320	332.2	324.5	8.4	2-382	5.33	329.57	•
3300	330	342.2	334.5	8.4	2-382	5.33	329.57	
3400	340	352.2	344.5	8.4	2-382	5.33	329.57	
3500	350	362.2	354.5	8.4	2-383	5.33	354.97	
3600	360	372.2	364.5	8.4	2-383	5.33	354.97	•
3700	370	382.2	374.5	8.4	2-383	5.33	354.97	
3800	380	392.2	384.5	8.4	2-384	5.33	380.37	
3900	390	402.2	394.5	11.0	2-384	5.33	380.37	
4000	400	412.2	404.5	8.4	2-385	5.33	405.26	
4100	410	422.2	414.5	8.4	2-385	5.33	405.26	
4200	420	432.2	424.5	8.4	2-386	5.33	430.66	
4300	430	446.0	435.2	11.0	2-463	6.99	430.66	
4400	440	456.0	445.2	11.0	2-464	6.99	443.38	
4500	450	466.0	455.2	11.0	2-465	6.99	456.03	
4600	460	476.0	465.2	11.0	2-466	6.99	468.76	
4700	470	486.0	475.2	11.0	2-466	6.99	468.76	
4800	480	496.0	485.2	11.0	2-467	6.99	481.46	
4900	490	506.0	495.2	11.0	2-468	6.99	494.16	
5000	500	516.0	502.5	11.0	2-469	6.99	506.86	
5200	520	536.0	522.5	11.0	2-470	6.99	532.26	
5500	550	566.0	552.5	11.0	2-471	6.99	557.66	
5700	570	586.0	572.5	11.0	2-472	6.99	582.68	
6000	600	616.0	602.5	11.0	2-473	6.99	608.08	
6200	620	636.0	622.5	11.0	2-474	6.99	633.48	
6400	640	656.0	642.5	11.0	2-475	6.99	658.88	
6500	650	670.0	652.5	14.0	-	8.40	660.00	
7000	700	720.0	702.5	14.0	-	8.40	695.00	
8000	800	820.0	802.5	14.0	-	8.40	800.00	
9000	900	920.0	902.5	14.0	-	8.40	888.00	

1) ISO 6195 Type D • Further sizes on request.

The function of wiper rings is to prevent dust, dirt, grains of sand and metal swarf from penetrating into axially moving rods and plungers. Thus the development of scratches is largely prevented, guiding elements and seals are protected and the working life of the sealing system is extended.

Profile AD consists of a PTFE wiper ring and an elastomer O-ring as a preloading element. It combines two functions: wiping against pollution from outside and a sealing function which reduces the residual oil film.

The material combination of the slipper ring (PTFE) and the O-ring (elastomer) makes this product suitable for a wide range of applications, especially for aggressive media and/or high temperatures. Multiple compounds can alternatively be selected according to the individual application profile.

Advantages

- Excellent wear resistance.
- Minimal break-away and dynamic friction and no stick-slip tendency ensures uniform motion even at low speeds.
- Good energy efficiency due to low friction.
- High temperature resistance assured by suitable O-ring compound selection.
- Adaptable to nearly all media thanks to high chemical resistance of the sealing ring and large O-ring compound selection.
- Dimensions according to DIN/ISO 6195, Type D.
- Installation in closed and undercut housings.
- Available in diameters from 4 to 3000 mm.
- Machined small-volume series and samples available with short lead times.

Range of Application

Operating temperature	-30 to +100 °C [1]
with FKM O-ring	-30 to +200 °C
Surface speed	≤ 4.0 m/s

[1] For requirements outside of standard temperature range please contact our consultancy service for suitable O-ring compound.

Compounds

Wiper ring: Polon® 052, modified PTFE with 40 % bronze
O-ring: N0674, NBR elastomer with approx. 70 Shore A

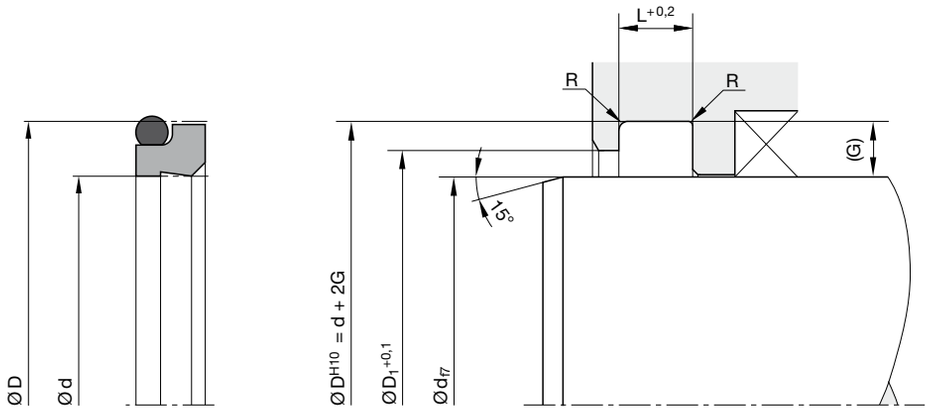

Housing dimensions

Series No.	Cross-section	O-ring cross-section (mm)	Recommended rod Ø range d (mm) ≥	<	Groove width L (mm)	Groove depth G (mm)	Retainer ring Ø D_1 (mm)	Radius max. R (mm)	ISO[1]
00590	A	1.78	6	12	3.7	2.4	d + 1.5	0.4	
00590	B	2.62	12	65	5.0	3.4	d + 1.5	0.4	
00590	C	3.53	65	250	6.0	4.4	d + 2.0	0.4	
00590	D	5.33	250	420	8.4	6.1	d + 2.0	0.4	
00590	E	6.99	420	650	11.0	8.0	d + 2.5	0.4	
00590	G	8.40	650	1000	14.0	10.0	d + 2.5	0.4	
00590	K	1.78	6	25	4.0	3.0	d + 2.5	0.4	•
00590	L	2.62	28	50	5.0	4.0	d + 3.0	0.4	•
00590	M	3.53	56	100	6.0	5.0	d + 3.0	0.4	•
00590	N	5.33	110	200	8.5*	7.5	d + 4.0	0.4	•
00590	O	6.99	220	360	12.0	10.0	d + 6.0	0.4	•

1) Housing dimensions according to ISO 6195 Type D * differs from to dimensions according to ISO 6195 Type D

Ordering example

Rod diameter 40 mm

AD 0400 052 00591 B (40.0 x 46.8 x 5.0)

AD Profile
0400 Rod diameter x 10
052 Compound
00591 Series no. / Compound code O-ring:

00590	without O-ring		
00591	N0674 (NBR)	70±5 Shore A	-30 / +110 °C
00592	V0747 (FKM)	75±5 Shore A	-25 / +200 °C
00593	N0304 (NBR)	75±5 Shore A	-50 / +110 °C
00594	E0540 (EPDM)	80±5 Shore A	-40 / +150 °C
00595	N3578 (NBR)	75±5 Shore A	-30 / +110 °C
00596	N3588 (NBR)	90±5 Shore A	-20 / +110 °C

B Cross-section

Please note

For certain applications, it may be appropriate to use a non-standard cross-section - reduced or heavier. In these cases, please replace the standard cross-section code (in above example: "B") by the one you require (for example "A" or "C").

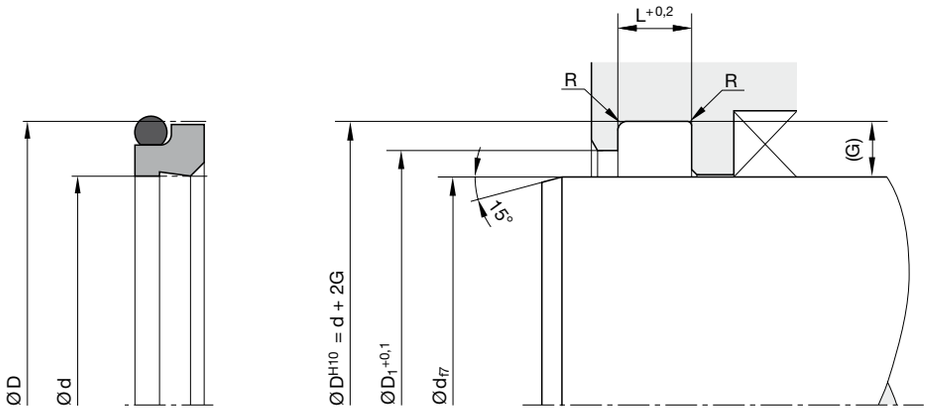

Standard range

Size	Groove Ø d mm	Ø D mm	Ø D_1 mm	L mm	O-ring No.	CS mm	ID mm	ISO 1)
0040	4	8.8	5.5	3.7	2-009	1.78	5.28	•
0050	5	9.8	6.5	3.7	2-010	1.78	6.07	•
0070	7	11.8	8.5	3.7	2-011	1.78	7.65	
0080	8	12.8	9.5	3.7	2-012	1.78	9.25	•
0100	10	14.8	11.5	3.7	2-013	1.78	10.82	•
0120	12	18.8	13.5	5.0	2-113	2.62	13.94	•
0140	14	20.8	15.5	5.0	2-114	2.62	15.54	•
0150	15	21.8	16.5	5.0	2-115	2.62	17.12	
0160	16	22.8	17.5	5.0	2-116	2.62	18.72	•
0180	18	24.8	19.5	5.0	2-117	2.62	20.29	•
0200	20	26.8	21.5	5.0	2-118	2.62	21.89	•
0240	24	30.8	25.5	5.0	2-120	2.62	25.07	
0250	25	31.8	26.5	5.0	2-121	2.62	26.64	•
0260	26	32.8	27.5	5.0	2-122	2.62	28.24	
0280	28	34.8	29.5	5.0	2-123	2.62	29.82	•
0300	30	36.8	31.5	5.0	2-124	2.62	31.42	
0320	32	38.8	33.5	5.0	2-126	2.62	34.59	•
0350	35	41.8	36.5	5.0	2-127	2.62	36.17	
0370	37	43.8	38.5	5.0	2-129	2.62	39.34	
0380	38	44.8	39.5	5.0	2-130	2.62	40.94	
0400	40	46.8	41.5	5.0	2-131	2.62	42.52	•
0420	42	48.8	43.5	5.0	2-132	2.62	44.12	
0450	45	51.8	46.5	5.0	2-134	2.62	47.29	•
0480	48	54.8	49.5	5.0	2-136	2.62	50.47	
0500	50	56.8	51.5	5.0	2-137	2.62	52.07	•
0520	52	58.8	53.5	5.0	2-138	2.62	53.64	
0550	55	61.8	56.5	5.0	2-140	2.62	56.82	
0580	58	64.8	59.5	5.0	2-142	2.62	59.99	
0600	60	66.8	61.5	5.0	2-143	2.62	61.60	
0650	65	73.8	67.0	6.0	2-231	3.53	66.27	
0700	70	78.8	72.0	6.0	2-233	3.53	72.62	•
0750	75	83.8	77.0	6.0	2-234	3.53	75.79	
0800	80	88.8	82.0	6.0	2-236	3.53	82.14	•
0850	85	93.8	87.0	6.0	2-237	3.53	85.32	
0900	90	98.8	92.0	6.0	2-239	3.53	91.67	•
0950	95	103.8	97.0	6.0	2-241	3.53	98.02	
1000	100	108.8	102.0	6.0	2-242	3.53	101.19	•
1100	110	118.8	112.0	6.0	2-245	3.53	110.72	•
1200	120	128.8	122.0	6.0	2-249	3.53	123.42	
1250	125	133.8	127.0	6.0	2-250	3.53	126.59	•
1300	130	138.8	132.0	6.0	2-252	3.53	132.94	
1400	140	148.8	142.0	6.0	2-255	3.53	142.47	

1) ISO 6195 Type D • Further sizes on request.

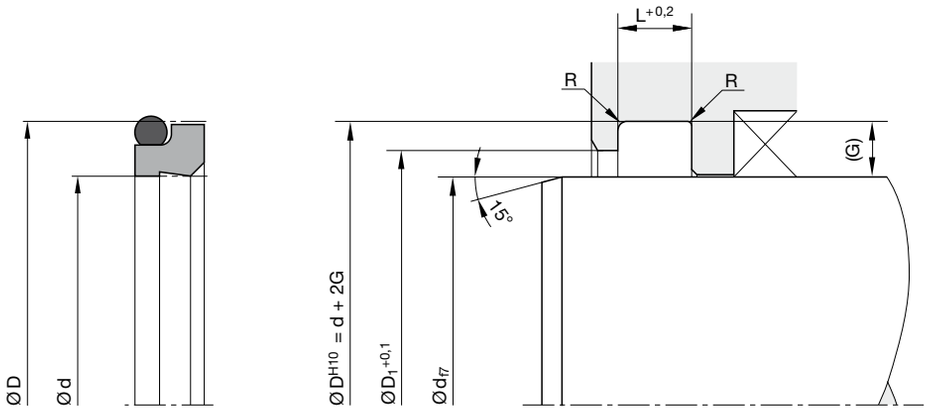

Size	Groove Ø d mm	Ø D mm	Ø D_1 mm	L mm	O-ring No.	CS mm	ID mm	ISO 1)
1500	150	158.8	152.0	6.0	2-258	3.53	151.99	
1550	155	163.8	157.0	6.0	2-259	3.53	158.34	
1600	160	168.8	162.0	6.0	2-260	3.53	164.69	
1700	170	178.8	172.0	6.0	2-261	3.53	171.04	
1750	175	183.8	177.0	6.0	2-262	3.53	177.39	
1800	180	188.8	182.0	6.0	2-263	3.53	183.74	
1850	185	193.8	187.0	6.0	2-263	3.53	183.74	
1900	190	198.8	192.0	6.0	2-264	3.53	190.09	
1950	195	203.8	197.0	6.0	2-265	3.53	196.44	
2000	200	208.8	202.0	6.0	2-266	3.53	202.79	
2100	210	218.8	212.0	6.0	2-267	3.53	209.14	
2200	220	228.8	222.0	6.0	2-269	3.53	221.84	
2250	225	233.8	227.0	6.0	2-270	3.53	228.19	
2300	230	238.8	232.0	6.0	2-271	3.53	234.54	
2400	240	248.8	242.0	6.0	2-272	3.53	240.89	
2500	250	258.8	252.0	6.0	2-274	3.53	253.59	•
2600	260	272.2	262.0	8.4	2-378	5.33	266.07	
2700	270	282.2	272.0	8.4	2-379	5.33	278.77	
2800	280	292.2	282.0	8.4	2-379	5.33	278.77	•
2900	290	302.2	292.0	8.4	2-380	5.33	291.47	
3000	300	312.2	302.0	8.4	2-381	5.33	304.17	
3100	310	322.2	312.0	8.4	2-381	5.33	304.17	
3200	320	332.2	322.0	8.4	2-382	5.33	329.57	•
3300	330	342.2	332.0	8.4	2-382	5.33	329.57	
3400	340	352.2	342.0	8.4	2-382	5.33	329.57	
3500	350	362.2	352.0	8.4	2-383	5.33	354.97	
3600	360	372.2	362.0	8.4	2-383	5.33	354.97	•
3700	370	382.2	372.0	8.4	2-383	5.33	354.97	
3800	380	392.2	382.0	8.4	2-384	5.33	380.37	
3900	390	402.2	392.0	8.4	2-384	5.33	380.37	
4000	400	412.2	402.0	8.4	2-385	5.33	405.26	
4100	410	422.2	412.0	8.4	2-385	5.33	405.26	
4200	420	432.2	422.5	8.4	2-386	5.33	430.66	
4300	430	446.0	432.5	11.0	2-463	6.99	430.66	
4400	440	456.0	442.5	11.0	2-464	6.99	443.38	
4500	450	466.0	452.5	11.0	2-465	6.99	456.03	
4600	460	476.0	462.5	11.0	2-466	6.99	468.76	
4700	470	486.0	472.5	11.0	2-466	6.99	468.76	
4800	480	496.0	482.5	11.0	2-467	6.99	481.46	
4900	490	506.0	492.5	11.0	2-468	6.99	494.16	
5000	500	516.0	502.5	11.0	2-469	6.99	506.86	

1) ISO 6195 Type D • Further sizes on request.

The OR rotary sealing set consists of a wear-resistant, low-friction PTFE slipper sealing ring and an elastomer o-ring as a preloading element. Depending on the special working conditions, the rotary sealing set OR is equipped with one or two circumferential lubricating grooves.

It is suitable mainly for applications where the pressure alternates from one side of the seal to the other, such as pivots for rotating track rings, swivel joints, hose reels, and in machine tool hydraulics. If the sealing set is used as an end seal, it is recommended to install a wiper ring at the end of the components.

Advantages

- Good sealing performance in extremely small assembly conditions.
- Minimal break-away and dynamic friction and no stick-slip tendency ensures uniform motion even at low speeds.
- Good energy efficiency due to low friction.
- Insensitive to pressure peaks.
- High temperature resistance assured by suitable O-ring compound selection.
- Improved lubrication due to pressure medium deposit in the dynamic contact area.
- High extrusion resistance.
- Adaptable to nearly all media thanks to high chemical resistance of the sealing ring and large O-ring compound selection.
- Short axial assembly length.
- Installation in closed and undercut housings.
- Available in diameters from 4 to 3000 mm.
- Machined small-volume series and samples available with short lead times.

Range of Application

Operating pressure	≤ 300 bar
Operating temperature	-30 to +100 °C [1)]
Surface speed	≤ 1.0 m/s

Recommendation for rotary transmissions: P · v ≤ 25 (40)
(For definition, see catalogue "Hydraulic Seals", chapter "Rotary Seals", Introduction.)

[1)] For requirements outside of standard temperature range please contact our consultancy service for suitable O-ring compound.

Compounds

Sealing ring: Polon® 033, modified PTFE + 25 % carbon
O-ring: N0674, NBR elastomer with approx. 70 Shore A.

Installation

For diameters < 30 mm open grooves are required.
This seal should only be used in combination with closed guiding elements.

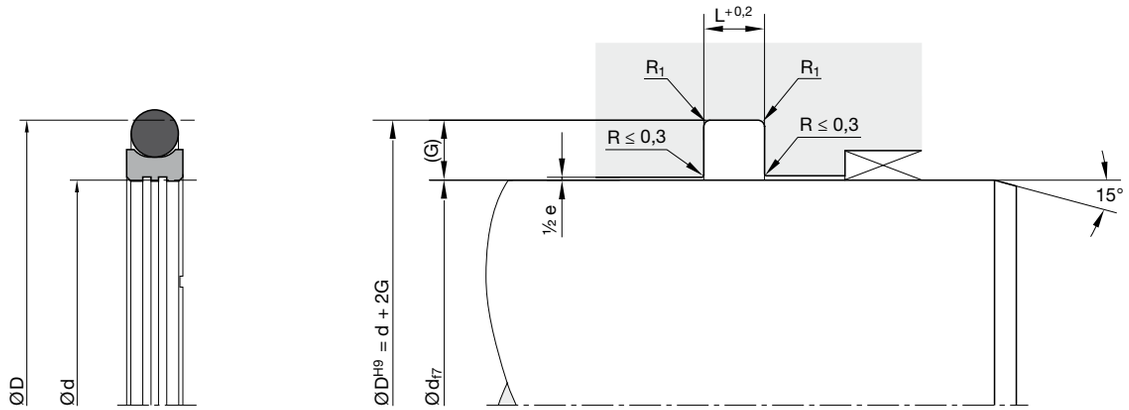

Housing dimensions

Series No.	Cross-section	O-ring cross-section (mm)	Recommended shaft Ø range d (mm)		Groove width L (mm)	Groove depth G (mm)	Gap max. 0–200 bar e (mm)	Gap max. 200–400 bar e (mm)	Radius max. R_1 (mm)
			≥	<					
00160	A	1.78	4	8	2.2	2.45	0.4 - 0.2	0.2 - 0.1	0.5
00160	B	2.62	8	19	3.2	3.75	0.4 - 0.2	0.2 - 0.1	0.5
00160	C	3.53	19	38	4.2	5.50	0.6 - 0.3	0.3 - 0.2	0.5
00160	D	5.33	38	200	6.3	7.75	0.8 - 0.4	0.4 - 0.2	0.9
00160	E	6.99	200	650	8.1	10.50	1.0 - 0.5	0.5 - 0.3	0.9
00160	F	6.99	200	650	8.1	12.25	1.0 - 0.5	0.5 - 0.3	0.9
00160	G	8.40	650	1000	9.5	14.00	1.0 - 0.5	0.5 - 0.3	0.9

Ordering example

Shaft diameter 80 mm

OR 0800 033 00161 D (80.0 x 95.5 x 6.3)

OR Profile
0800 Shaft diameter x 10
033 Compound
00161 Series no. / Compound code O-ring:

00160	without O-ring		
00161	N0674 (NBR)	70±5 Shore A	-30 / +110 °C
00162	V0747 (FKM)	75±5 Shore A	-25 / +200 °C
00163	N0304 (NBR)	75±5 Shore A	-50 / +110 °C
00164	E0540 (EPDM)	80±5 Shore A	-40 / +150 °C
00165	N3578 (NBR)	75±5 Shore A	-30 / +110 °C
00166	N3588 (NBR)	90±5 Shore A	-20 / +110 °C

D Cross-section

Please note
For certain applications, it may be appropriate to use a non-standard cross-section - reduced or heavier. In these cases, please replace the standard cross-section code (in above example: “D”) by the one you require (for example “C” or “E”).

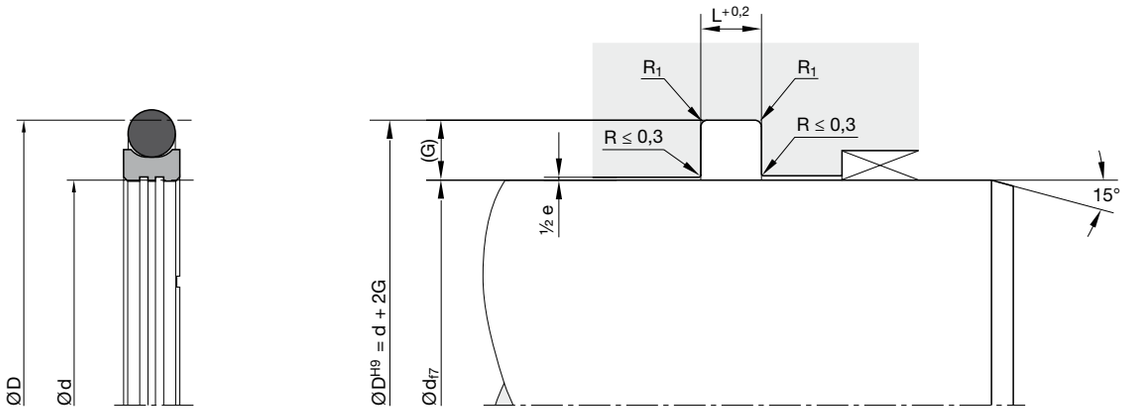

Standard range

Groove				O-ring		
Size	Ø d mm	Ø D mm	L mm	No.	CS mm	ID mm
0040	4	8.9	2.2	2-010	1.78	6.07
0060	6	10.9	2.2	2-011	1.78	7.65
0080	8	12.9	2.2	2-012	1.78	9.25
0100	10	14.9	2.2	2-013	1.78	10.82
0120	12	16.9	2.2	2-015	1.78	14.00
0140	14	18.9	2.2	2-016	1.78	15.60
0160	16	20.9	2.2	2-017	1.78	17.17
0170	17	21.9	2.2	2-018	1.78	18.77
0180	18	22.9	2.2	2-019	1.78	20.35
0190	19	26.5	3.2	2-118	2.62	21.89
0200	20	27.5	3.2	2-119	2.62	23.47
0220	22	29.5	3.2	2-120	2.62	25.07
0240	24	31.5	3.2	2-121	2.62	26.64
0250	25	32.5	3.2	2-122	2.62	28.24
0270	27	34.5	3.2	2-123	2.62	29.82
0280	28	35.5	3.2	2-124	2.62	31.42
0300	30	37.5	3.2	2-125	2.62	32.99
0320	32	39.5	3.2	2-126	2.62	34.59
0330	33	40.5	3.2	2-127	2.62	36.17
0350	35	42.5	3.2	2-128	2.62	37.77
0360	36	43.5	3.2	2-129	2.62	39.34
0370	37	44.5	3.2	2-130	2.62	40.94
0380	38	49.0	4.2	2-223	3.53	40.87
0400	40	51.0	4.2	2-224	3.53	44.04
0420	42	53.0	4.2	2-225	3.53	47.22
0450	45	56.0	4.2	2-226	3.53	50.39
0480	48	59.0	4.2	2-227	3.53	53.57
0500	50	61.0	4.2	2-228	3.53	56.74
0550	55	66.0	4.2	2-229	3.53	59.92
0600	60	71.0	4.2	2-230	3.53	63.09
0630	63	74.0	4.2	2-231	3.53	66.27
0650	65	76.0	4.2	2-232	3.53	69.44
0700	70	81.0	4.2	2-233	3.53	72.62
0750	75	86.0	4.2	2-235	3.53	78.97
0800	80	91.0	4.2	2-237	3.53	85.32
0850	85	96.0	4.2	2-238	3.53	88.49
0900	90	101.0	4.2	2-240	3.53	94.84
0950	95	106.0	4.2	2-242	3.53	101.19
1000	100	111.0	4.2	2-243	3.53	104.37
1100	110	121.0	4.2	2-246	3.53	113.89
1200	120	131.0	4.2	2-249	3.53	123.42
1300	130	141.0	4.2	2-252	3.53	132.94

Groove				O-ring		
Size	Ø d mm	Ø D mm	L mm	No.	CS mm	ID mm
1400	140	151.0	4.2	2-255	3.53	142.47
1500	150	161.0	4.2	2-258	3.53	151.99
1600	160	171.0	4.2	2-260	3.53	164.69
1700	170	181.0	4.2	2-261	3.53	171.04
1800	180	191.0	4.2	2-263	3.53	183.74
1900	190	201.0	4.2	2-264	3.53	190.09
2000	200	215.5	6.3	2-369	5.33	202.57
2100	210	225.5	6.3	2-371	5.33	215.27
2200	220	235.5	6.3	2-372	5.33	221.62
2300	230	245.5	6.3	2-374	5.33	234.32
2400	240	255.5	6.3	2-375	5.33	240.67
2500	250	265.5	6.3	2-377	5.33	253.37
2560	256	277.0	8.1	2-449	6.99	253.37
2600	260	281.0	8.1	2-450	6.99	266.07
2700	270	291.0	8.1	2-451	6.99	278.77
2800	280	301.0	8.1	2-451	6.99	278.77
2900	290	311.0	8.1	2-452	6.99	291.47
3000	300	321.0	8.1	2-453	6.99	304.17
3100	310	331.0	8.1	2-454	6.99	316.87
3200	320	341.0	8.1	2-455	6.99	329.57
3300	330	351.0	8.1	2-456	6.99	342.27
3400	340	361.0	8.1	2-457	6.99	354.97
3500	350	371.0	8.1	2-457	6.99	354.97
3600	360	381.0	8.1	2-458	6.99	367.67
3700	370	391.0	8.1	2-459	6.99	380.37
3800	380	401.0	8.1	2-460	6.99	393.07
3900	390	411.0	8.1	2-461	6.99	405.26
4000	400	421.0	8.1	2-461	6.99	405.26
4200	410	431.0	8.1	2-462	6.99	430.66
4500	450	471.0	8.1	2-465	6.99	456.06
4700	470	491.0	8.1	2-467	6.99	481.46
5000	500	521.0	8.1	2-469	6.99	506.86
5300	530	551.0	8.1	2-470	6.99	532.26
5500	550	571.0	8.1	2-471	6.99	557.66
5800	580	601.0	8.1	2-472	6.99	582.68
6000	600	621.0	8.1	2-473	6.99	608.08
6200	620	641.0	8.1	2-473	6.99	608.08
6400	640	661.0	8.1	2-474	6.99	633.48
6500	650	678.0	9.5	-	8.40	649.00
8000	800	828.0	9.5	-	8.40	810.00

Further sizes on request.

The OQ rotary sealing set consists of a wear-resistant, low-friction PTFE slipper sealing ring and an elastomer o-ring as a preloading element.

It is suitable mainly for applications where the pressure alternates from one side of the seal to the other, such as pivots for rotating track rings, swivel joints, hose reels, and in machine tool hydraulics. If the sealing set is used as an end seal, it is recommended to install a wiper ring at the end of the components.

Based on friction conditions during rotating movements in the application, the sealing set profile OR should generally be preferred. Only if housing limitations are given the profile OQ should be considered.

Depending on the special working conditions, the rotary sealing set OR is equipped with one or two circumferential lubricating grooves.

Advantages

- Excellent wear resistance.
- Minimal break-away and dynamic friction and no stick-slip tendency ensures uniform motion even at low speeds.
- Good energy efficiency due to low friction.
- High temperature resistance assured by suitable O-ring compound selection.
- Adaptable to nearly all media thanks to high chemical resistance of the sealing ring and large O-ring compound selection.
- Dimensions according to DIN/ISO 6195, Type D.
- Installation in closed and undercut housings.
- Available in diameters from 4 to 3000 mm.
- Machined small-volume series and samples available with short lead times.

Range of Application

Operating pressure	≤ 300 bar
Operating temperature	-30 to +100 °C [1)]
Surface speed	≤ 1.0 m/s

Recommendation for rotary transmissions: P · v ≤ 25 (40)
(For definition see catalogue “Hydraulic Seals”, chapter “Rotary Seals”, introduction.)

[1)] For requirements outside of standard temperature range please contact our consultancy service for suitable O-ring compound.

Compounds

Sealing ring: Polon® 033, modified PTFE + 25 % carbon
O-ring: N0674, NBR elastomer with approx. 70 Shore A

This seal should only be used in combination with closed guiding elements.

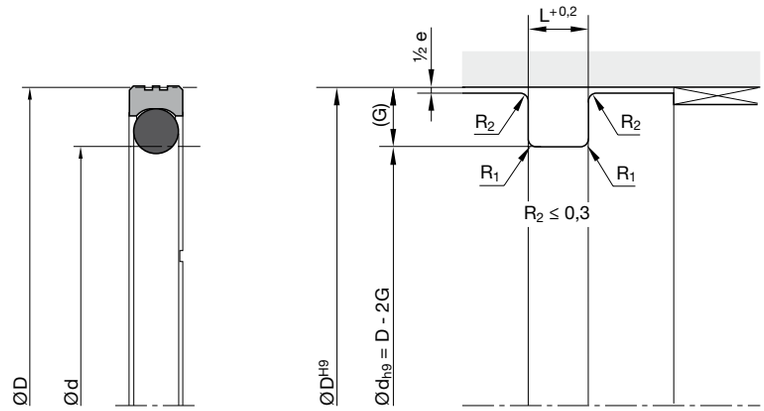

Housing dimensions

Series No.	Cross-section	O-ring cross-section (mm)	Recommended piston Ø range D (mm)		Groove width L (mm)	Groove depth G (mm)	Gap max. 0–200 bar e (mm)	Gap max. 200–400 bar e (mm)	Radius max. R_1 (mm)
			≥	<					
00260	A	1.78	8	15	2.2	2.45	0.4 - 0.2	0.2 - 0.1	0.5
00260	B	2.62	15	40	3.2	3.75	0.4 - 0.2	0.2 - 0.1	0.5
00260	C	3.53	40	80	4.2	5.50	0.6 - 0.3	0.3 - 0.2	0.5
00260	D	5.33	80	133	6.3	7.75	0.8 - 0.4	0.4 - 0.2	0.9
00260	E	6.99	133	330	8.1	10.50	1.0 - 0.5	0.5 - 0.3	0.9
00260	F	6.99	330	670	8.1	12.25	1.0 - 0.5	0.5 - 0.3	0.9
00260	G	8.40	670		9.5	14.00	1.0 - 0.5	0.5 - 0.3	0.9

Ordering example

Rotary diameter 80 mm

OQ 0800 033 00261 C (80.0 x 69.0 x 4.2)

OQ Profile
0800 Shaft diameter x 10
033 Compound
00261 Series no. / Compound code O-ring:

00260	without O-ring		
00261	N0674 (NBR)	70±5 Shore A	-30 / +110 °C
00262	V0747 (FKM)	75±5 Shore A	-25 / +200 °C
00263	N0304 (NBR)	75±5 Shore A	-50 / +110 °C
00264	E0540 (EPDM)	80±5 Shore A	-40 / +150 °C
00265	N3578 (NBR)	75±5 Shore A	-30 / +110 °C
00266	N3588 (NBR)	90±5 Shore A	-20 / +110 °C

C Cross-section

Please note
For certain applications, it may be appropriate to use a non-standard cross-section – reduced or heavier. In these cases, please replace the standard cross-section code (in above example: “C”) by the one you require (for example “B” or “D”).

Further sizes on request.

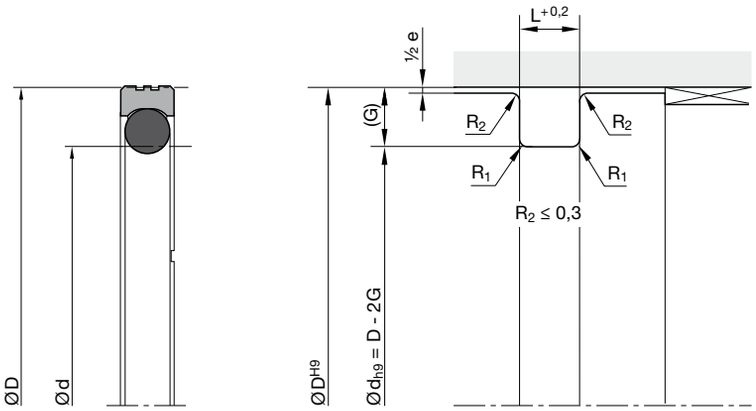

Standard range

Groove				O-ring			Groove				O-ring		
Size	Ø d mm	Ø D mm	L mm	No.	CS mm	ID mm	Size	Ø d mm	Ø D mm	L mm	No.	CS mm	ID mm
0080	8	3.1	2.2	2-006	1.78	2.90	1600	160	144.5	6.3	2-358	5.33	142.24
0100	10	5.1	2.2	2-008	1.78	4.47	1650	165	149.5	6.3	2-360	5.33	148.59
0120	12	7.1	2.2	2-010	1.78	6.07	1700	170	154.5	6.3	2-361	5.33	151.77
0160	16	11.1	2.2	2-012	1.78	9.25	1750	175	159.5	6.3	2-362	5.33	158.12
0180	18	13.1	2.2	2-014	1.78	12.42	1800	180	164.5	6.3	2-363	5.33	164.47
0200	20	15.1	2.2	2-015	1.78	14.00	1900	190	174.5	6.3	2-364	5.33	170.82
0220	22	17.1	2.2	2-017	1.78	17.17	1950	195	179.5	6.3	2-365	5.33	177.17
0250	25	20.1	2.2	2-018	1.78	18.77	2000	200	184.5	6.3	2-366	5.33	183.52
0280	28	23.1	2.2	2-020	1.78	21.95	2100	210	194.5	6.3	2-367	5.33	189.87
0300	30	25.1	2.2	2-022	1.78	25.12	2200	220	204.5	6.3	2-369	5.33	202.57
0320	32	27.1	2.2	2-023	1.78	26.70	2300	230	214.5	6.3	2-370	5.33	208.92
0340	34	29.1	2.2	2-024	1.78	28.30	2400	240	224.5	6.3	2-372	5.33	221.62
0360	36	31.1	2.2	2-025	1.78	29.87	2500	250	234.5	6.3	2-374	5.33	234.32
0400	40	32.5	3.2	2-124	2.62	31.42	2600	260	244.5	6.3	2-375	5.33	240.67
0420	42	34.5	3.2	2-125	2.62	32.99	2700	270	254.5	6.3	2-377	5.33	253.37
0450	45	37.5	3.2	2-127	2.62	36.17	2800	280	264.5	6.3	2-378	5.33	266.07
0480	48	40.5	3.2	2-129	2.62	39.34	3000	300	284.5	6.3	2-379	5.33	278.77
0500	50	42.5	3.2	2-130	2.62	40.94	3100	310	294.5	6.3	2-380	5.33	291.47
0520	52	44.5	3.2	2-132	2.62	44.12	3200	320	304.5	6.3	2-381	5.33	304.17
0550	55	47.5	3.2	2-133	2.62	45.69	3300	330	309.0	8.1	2-453	6.99	304.17
0600	60	52.5	3.2	2-137	2.62	52.07	3400	340	319.0	8.1	2-454	6.99	316.87
0630	63	55.5	3.2	2-138	2.62	53.64	3500	350	329.0	8.1	2-455	6.99	329.57
0650	65	57.5	3.2	2-140	2.62	56.82	3700	370	349.0	8.1	2-456	6.99	342.27
0700	70	62.5	3.2	2-143	2.62	61.60	3800	380	359.0	8.1	2-457	6.99	354.97
0750	75	67.5	3.2	2-146	2.62	66.34	3900	390	369.0	8.1	2-458	6.99	367.67
0800	80	69.0	4.2	2-231	3.53	66.27	4100	410	389.0	8.1	2-459	6.99	380.37
0850	85	74.0	4.2	2-233	3.53	72.62	4200	420	399.0	8.1	2-460	6.99	393.07
0900	90	79.0	4.2	2-235	3.53	78.97	4300	430	409.0	8.1	2-461	6.99	405.26
0950	95	84.0	4.2	2-236	3.53	82.14	4400	440	419.0	8.1	2-462	6.99	417.96
1000	100	89.0	4.2	2-238	3.53	88.49	4600	460	439.0	8.1	2-463	6.99	430.66
1050	105	94.0	4.2	2-239	3.53	91.67	4700	470	449.0	8.1	2-464	6.99	443.36
1100	110	99.0	4.2	2-241	3.53	98.02	4800	480	459.0	8.1	2-465	6.99	456.06
1150	115	104.0	4.2	2-242	3.53	101.19	5000	500	479.0	8.1	2-466	6.99	468.76
1200	120	109.0	4.2	2-244	3.53	107.54	5500	550	529.0	8.1	2-470	6.99	532.26
1250	125	114.0	4.2	2-246	3.53	113.89	6000	600	579.0	8.1	2-472	6.99	582.68
1300	130	119.0	4.2	2-247	3.53	117.07	6500	650	629.0	8.1	2-474	6.99	633.48
1330	133	117.5	6.3	2-349	5.33	113.67	6600	690	669.0	8.1	2-475	6.99	658.88
1350	135	119.5	6.3	2-350	5.33	116.84	3300	330	305.5	8.1	2-453	6.99	304.17
1400	140	124.5	6.3	2-352	5.33	123.19	4500	450	425.5	8.1	2-462	6.99	417.96
1450	145	129.5	6.3	2-354	5.33	129.54	5000	500	475.5	8.1	2-466	6.99	468.76
1500	150	134.5	6.3	2-355	5.33	132.72	5500	550	525.5	8.1	2-470	6.99	532.22
1550	155	139.5	6.3	2-357	5.33	139.07	6000	600	575.5	8.1	2-471	6.99	557.66

Further sizes on request.

5.5 Slipper seal material selection

5.5.1. Dynamic element

Parker draws on a wide range of PTFE compounds and other polymeric materials to manufacture the dynamic element of the slipper seal. Our material range includes standard and speciality filled PTFE compounds, TFM blends, polyethylene, polyurethane, thermoplastics, PEEK, …

Table 5.3 shows a selection of our preferred polymer materials used for the dynamic element of a slipper seal. Please start by making an initial, possibly multiple, selection of all materials with appropriate application descriptions and service temperature ranges. The final selection may then be made using the performance rating values for a material with the best combination of characteristics for the intended service.

For guidance on selecting a material other than those listed, please contact our consultancy service.

Code	Description	Colour
005	PTFE + Aromatic Polyester	Cream
006	UHMW-PE	Translucent
007	PTFE + Carbon/Graphite	Black
012	Modified PTFE	Dark green
025	PTFE + Glass fibre	Dark green
030	PTFE + Carbon/Graphite	Black
033	PTFE + Carbon	Black
052	PTFE + Bronze	Bronze
062	PTFE + Bronze	Bronze
074	PTFE + Carbon fibre	Black

Table 5.3 – Glide ring seal dynamic element materials.

Notes
1) High-temperature end is subject to extrusion gap guidelines.
2) Not recommended in rotary applications due to generation of frictional heat.
3) We emphasize that this table should be used as a guide only.
The data provided is based primarily on laboratory and service tests but does not take
into account all variables that may be encountered in field use.
Therefore, it is always advisable to test the material in field service conditions before specification. If this is not practical,
tests should be designed in such a way that service conditions are simulated as closely as possible.
4) 1 is lowest rating, 5 is highest rating.

	Applications	Temperature range (°C)	Wear resistance [4]	FDA-compliant	Minimum recommended dynamic surface hardness (HRC)
	A dynamic material for softer mating surfaces and a static material for high temperatures. Excellent wear resistance without abrasion. Not recommended for applications involving steam > 120°C. Used for rotary slipper.	-260 +315	3	No	25
	One of the toughest, most wear-resistant materials with limitations, however, in terms of temperature and chemical resistance. Intended for reciprocating or very slow rotary applications. Outstanding wear properties in water and air. Higher friction coefficient than PTFE.	-260 +80	1 [2]	Yes	35
	Water/oil hydraulics. Excellent general-purpose material. Performs well in non-lubricated systems.	-260 +300	4	No	50
	Improved wear resistance compared to unfilled PTFE. Low-duty hydraulic applications.	-190 +230	2	No	25
	Improves wear resistance and offers good compressive strength. Only use on very hard mating surfaces. Do not use with strong bases or hydrofluoric acid. Medium-duty hydraulic applications.	-260 +300	3	No	60
	Water/oil hydraulics. Excellent general purpose material. Performs well in non-lubricated systems.	-260 +300	4	No	50
	High wear resistance. Typical rotary slipper seal material.	-260 +300	4	No	50
	Heavy-duty hydraulic applications. Excellent for high speeds.	-260 +260	4	No	45
	Higher bronze content than material 052. Heavy-duty hydraulic applications. Excellent for high speeds.	-260 +260	5	No	45
	Excellent wear behaviour in water hydraulics. Recommended for high-frequency/short-stroke applications.	-260 +300	4	No	50

5.5.2. O-ring

Table 5.4 lists the standard elastomeric compounds and their operational temperature range for use with the slipper seal.
To select the O-ring, the chemical and temperature conditions of the application should be considered.
Please consult the Parker O-ring Handbook as a general reference.

Code	Compound base	Parker compound	Hardness (Shore A)	Temperature range (°C)	
				–	+
0	No O-ring. Code used to designate PTFE component only.				
1	NBR	N0674	70±5	30	110
2	FKM	V0747	75±5	25	200
3	NBR	N0304	75±5	50	110
4	EPDM	E0540	80±5	40	150
5	NBR	N3578	75±5	30	110
6	NBR	N3588	90±5	20	110

Table 5.4 – Standard O-ring coding and temperature range.

5.6 Installation guidelines

5.6.1 Piston seals

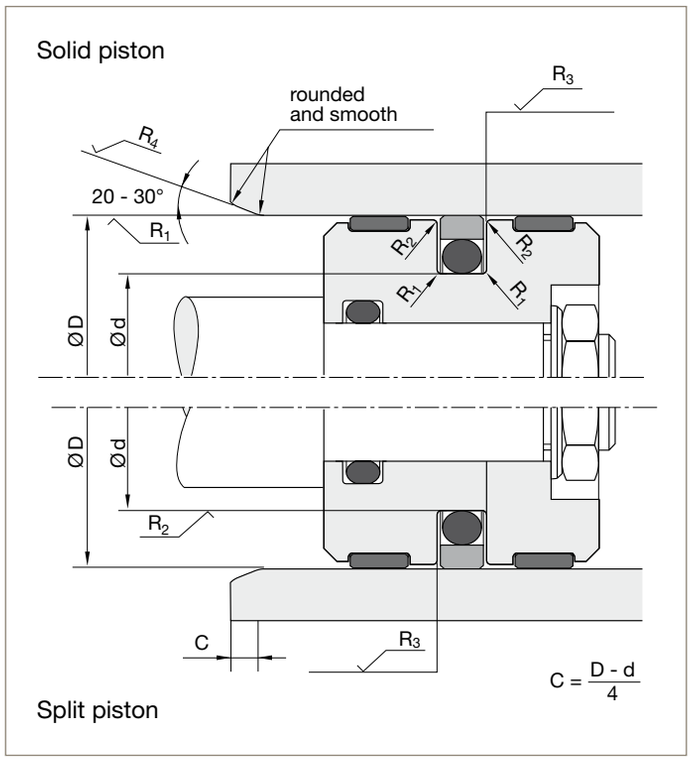

Fig. 5.5 – Slipper seal, piston-type.

Dynamic sealing surfaces
For rubber and PTFE products:
R_1: R_z 1.0 µm / R_a 0.2 µm
80 % ≤ $*t_{p1}$ ≤ 95 %
For polyurethane products:
R_1: R_z 1.6 µm / R_a 0.4 µm
60 % ≤ $*t_{p1}$ ≤ 80 %

Static sealing surfaces
R_2: R_z 6.3 µm / R_a 0.8 µm
$*t_{p2}$: ≥ 60 %

Non-sealing surfaces and lead-in chamfers
R_3: R_z 16 µm / R_a 4 µm
R_4: R_z 10 µm / R_a 1.6 µm

* Measured in a depth of 25 % of the R_t value, based on a reference level (zero line) set at 5 % bearing area

Relevant International (ISO) and national (DIN) standards for seal housing dimensions should be considered. For seals requiring a special groove, e.g. specialty seals, valve seals, rotor seals etc., the groove dimensions are stated separately. In general, the surface finishes, lead-in chamfers and dimensions stated here have have been proved in field use and will largely be found in the standards.

We recommend adherence to the tolerances and surface finishes stated in this catalogue. Adherence to these parameters is a prequisite for easy fitting of seals and avoidance of damage during installation.

Surfaces
Grinding as a final machining process for dynamic sealing surfaces is not sufficient. These surfaces require subsequent polishing.

Radii
For the required radii please refer to the respective profile data or the applicable standards.

Installation guidelines
The grooves must be carefully cleaned and deburred. The cylinder bore must have a lead-in chamfer. When fitting the piston sealing ring there is always a risk that the ring may tilt and be sheared off by normal lead-in chamfers (see fig. 5.51). We therefore recommend that up to a cylinder diameter of 230 mm a lead-in chamfer according to fig. 5.52 or detail »A« is considered. In the case of smaller rings which are especially liable to bending we recommend an open-groove design for diameters smaller than 30 mm.

Assembly instructions
Install the O-ring in the groove as per normal practice. Piston sealing rings of up to a 100 mm diameter and wall thickness of over 1.6 mm should be “slowly” expanded and fitted with an assembly tool (see fig. 5.53). Pre-heating to 60 °C in hydraulic oil is advantageous. Larger rings can be expanded by hand. Uneven stretching or overstretching must be avoided under all circumstances
Should it be necessary to pull the rings across existing guide ring grooves, then these grooves must be covered with plastic tape or, alternatively, the expanding mandrel must reach the groove in question (see fig. 5.53). This ensures that the piston sealing ring does not snap into the wrong groove. The use of a burnishing shell is recommended when the assembly of a piston is made difficult by an overstretched ring or when the cylinder has an inadequate lead-in chamfer (see fig. 5.54).
Assembly aids can be manufactured conveniently out of metal. However, in many cases polyamide or POM is also suitable.

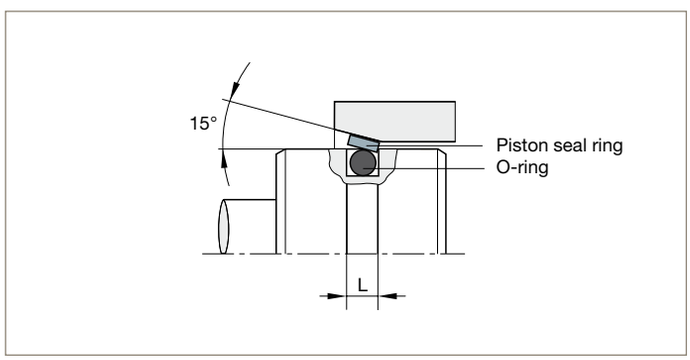

Fig. 5.51 – Slipper seal, piston-type, installation, step 1.
Tilting of the sealing ring when installing a piston-type slipper seal.

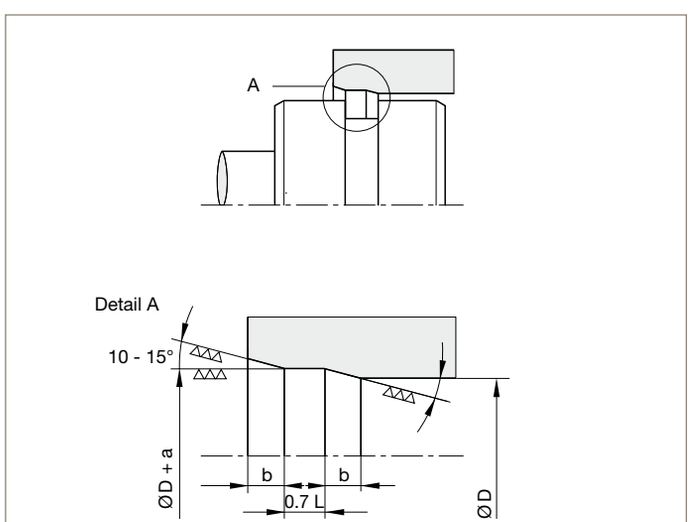

Ø D	min. a	min. b
≤ 45	0.8	2.4
45 - 175	1.0	3.0
175 - 230	1.5	4.5

Fig. 5.52 – Slipper seal, piston-type, installation, step 2.
Recommended lead-in chamfer for piston-type slipper seal installation.

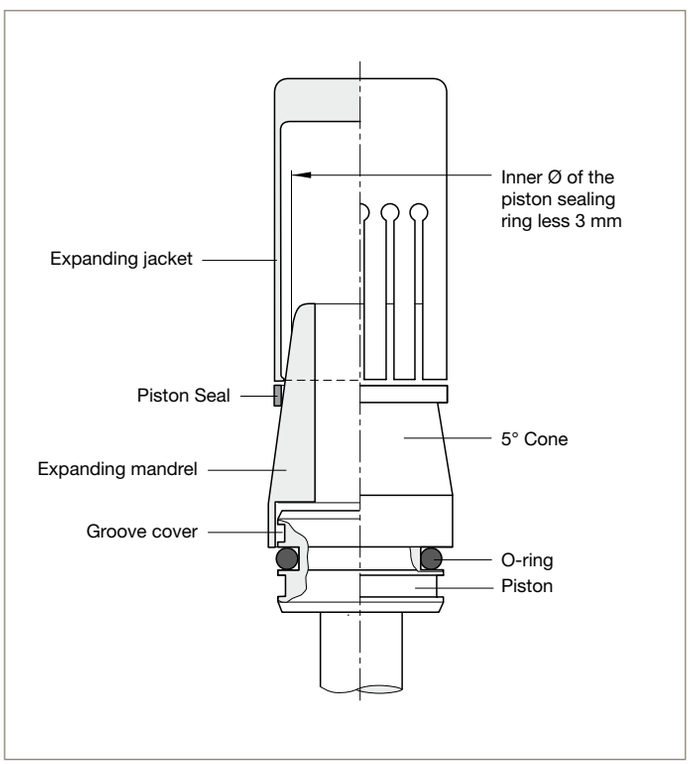

Fig. 5.53 – Slipper seal, piston-type, installation, step 3.
Stretching tool set for installation of a piston-type slipper seal.

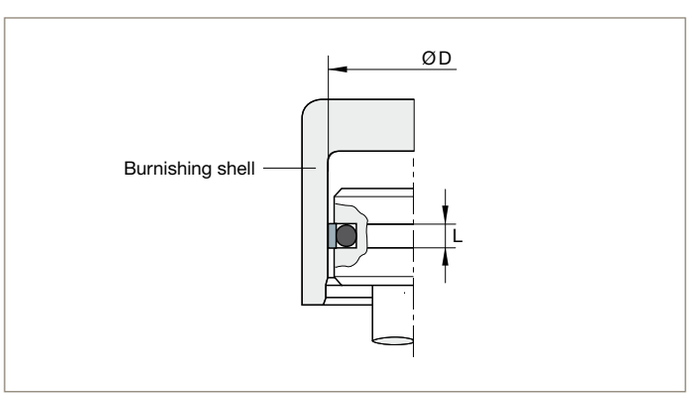

Fig. 5.54 – Slipper seal, piston-type, installation, step 4.
Resizing of the piston-type slipper seal.

5.6.2 Rod seals

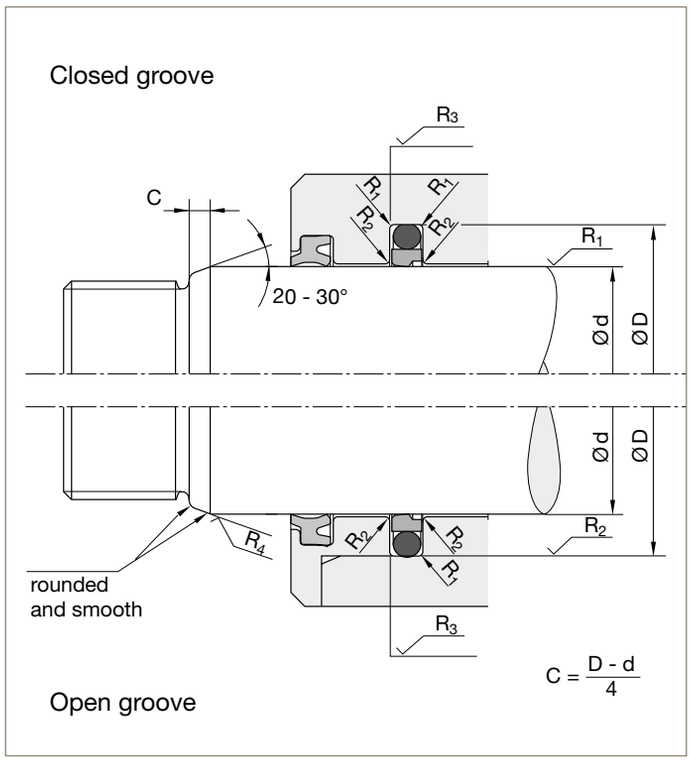

Fig. 5.6 – Slipper seal, rod-type.

Dynamic sealing surfaces
For rubber and PTFE products:
R_1: R_z 1.0 µm / R_a 0.2 µm
80 % ≤ $*t_{p1}$ ≤ 95 %
For polyurethane products:
R_1: R_z 1.6 µm / R_a 0.4 µm
60 % ≤ $*t_{p1}$ ≤ 80 %

Static sealing surfaces
R_2: R_z 6.3 µm / R_a 0.8 µm
$*t_{p2}$: ≥ 60 %

Non-sealing surfaces and lead-in chamfers
R_3: R_z 16 µm / R_a 4 µm
R_4: R_z 10 µm / R_a 1.6 µm

* Measured in a depth of 25 % of the R_t value, based on a reference level (zero line) set at 5 % bearing area

Installations
The grooves must be carefully cleaned and deburred. The rods must have a lead-in chamfer (see picture on previous page).
We recommend open-groove designs for rod diameters smaller than 30 mm as these rings are prone to breaking if deformed as described above.

Assembly instructions
First the O-ring must be installed in the groove. Then the rod seal should be carefully formed into a kidney shape without sharp bends as shown in fig. 5.72. This deformed ring is placed in the groove and rounded with the aid of a pin.

Fig. 5.71: Another type of installation aid. It consists of a metal pin which has a female cone-shaped recess at one of its front ends. The PTFE ring can be easily placed in the recess by manually deforming it (see fig. 5.72). Due to the reduced diameter the PTFE ring (still placed on the pin) can now be installed in the groove. After removal of the pin the PTFE ring can be pressed into the groove and re-formed.

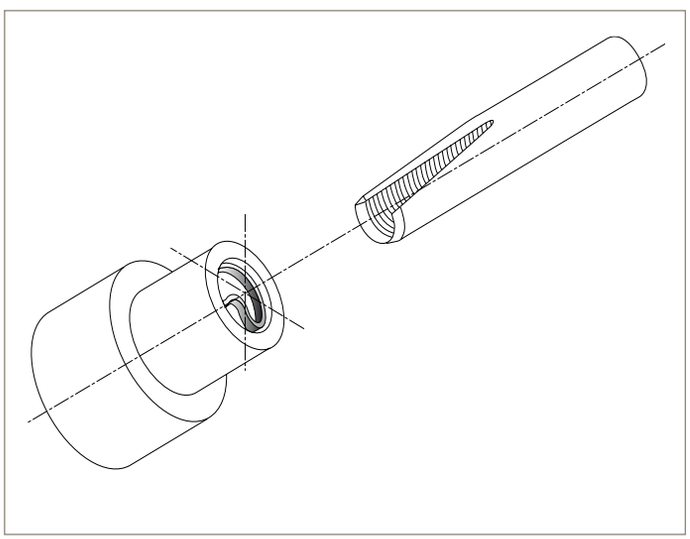

Fig. 5.71 – Slipper seal, rod-type, installation 1.

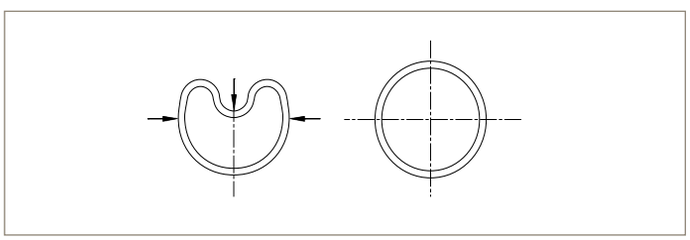

Fig. 5.72 – Slipper seal, rod-type, installation 2.

6. Anti-extrusion rings

Anti-extrusion rings are used when it is not possible for the seal to maintain an extrusion gap below the maximum recommended value. Anti-extrusion rings are typically made of polymer compounds that are more resistant to high-pressures than the seal material. They are installed behind the seal, providing a smaller extrusion gap and allowing the seal to operate properly.

Parker offers anti-extrusion rings for use with FlexiSeals® or elastomeric O-rings. Refer to the standard part numbering guidelines below for selecting the appropriate anti-extrusion ring for your application.

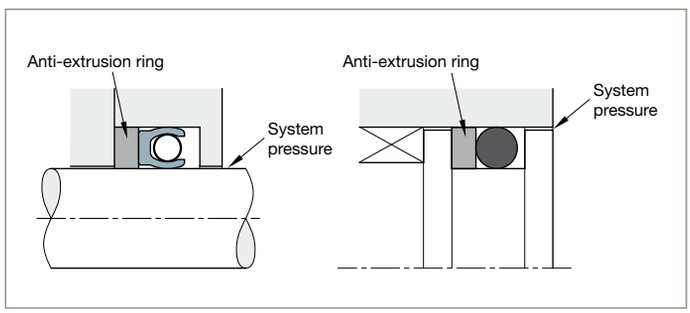

Fig. 6.1 – Use of anti-extrusion rings with FlexiSeals® and O-rings.

Contents	Page
6.1 Anti-extrusion rings for FlexiSeals®	164
6.2 Anti-extrusion rings for elastomer O-rings	166
6.3 Anti-extrusion ring materials	168

6. Anti-extrusion rings

6.1 Anti-extrusion rings for FlexiSeals®

The FlexiSeal® anti-extrusion ring standard range is defined by the following part numbers which include all key design elements

IXX M000000 00 000

- **Material**
- **Cross-section code**
  (Same as FlexiSeal® for this groove)
- **Groove diameter**
  millimetre specified to 2 decimal places)
  (Same as FlexiSeal® for this groove)
- **M for metric units (millimetre)**
- **Indicate A, O or I**
  (Same as FlexiSeal® for this groove)
- **Type of anti-extrusion ring: A, B, C or D**
  (See Table 6.2)

Extrusion gap up to 50 % above maximum recommended in fig 4.53 or chapter 4.6.4		Extrusion gap up to 100 % above maximum recommended in fig 4.53 or chapter 4.6.4	
A	**B**	**C**	**D**
Single, plain ring	Single, plain ring with scarf cut [a]	2-piece, double-angled ring	2-piece, double-angled ring with scarf cut [a, b]
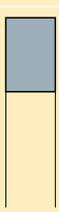	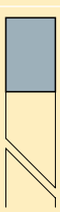	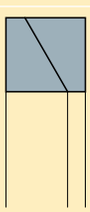	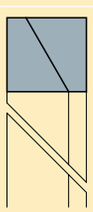

Table 6.2 – Standard anti-extrusion ring types for FlexiSeals®.

Notes
a) Scarf-cut rings are required for installation in partially or fully closed-grooves.
b) Refer to figure 6.4 for additional non-standard anti-extrusion ring configurations. Please consult our consultancy service for assistance.

The use of anti-extrusion rings requires an increase to the standard groove width G, which is provided in chapter 4.3.4. To allow for proper installation, the standard groove width should be increased as follows

Nominal seal cross-section	1/16”	3/32”	1/8”	3/16”	¼”	3/8”	½”
Seal cross-section code	01	02	03	04	05	06	07
IAX and IBX (mm)	1.5	2.0	2.5	3.0	3.5	5.0	6.5
ICX and ICX (mm)	2.8	3.3	3.8	4.6	5.5	7.4	9.3

Table 6.3 – Increase of standard groove width for standard anti-extrusion rings for FlexiSeal®.

Ordering example

IAO M010000 04 004
(to be used together with BAO M010000 04 002 1)

IAO	Anti-extrusion ring type (plain, uncut ring, linked to seal type BAO)
M	Metric
010000	Groove outer diameter (100 mm)
04	Cross-section code
004	Material code (PTFE + bronze)

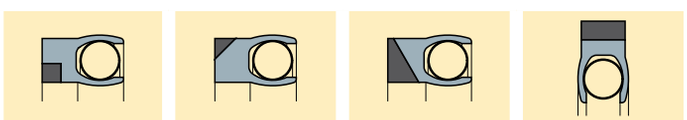

Fig. 6.4 – Non-standard anti-extrusion ring configurations for FlexiSeals®.

6.2 Anti-extrusion rings for elastomeric O-rings

In cases where the intention is to seal with O-rings only, we recommend to specify anti-extrusion rings when at least one of the following conditions is present

- Pressure above 7 MPa.
- Diametrical clearance exceeding 0.25 mm at a pressure above 1 MPa.
- High stroke frequency.
- High temperatures.
- Contaminated medium.
- Strong pressure pulsing or pressure changes.

The O-ring anti-extrusion ring standard range is defined by the following part numbers which include all key design elements

XX XXXX XXX 090XX X

Cross-section code
See Table 6.6

Series number
See Table 6.6

Material
See Table 6.7

Groove outer diameter x 10 (millimeter)

Type of anti-extrusion ring (XA, XB or XC)
See Figure 6.5

Ordering example

5.33 mm	O-ring cross-section
60 mm	Groove inner diameter
dynamic, hydraulic	Application

XB 0694 004 0902Y J

XB	Anti-extrusion ring type (plain, cut ring)
0694	Groove outer diameter (= inner diameter + 2 x t) = 60 + 2 x 4.6 = 69.4 mm
004	Material (004 = PTFE + bronze)
0902Y	Series number
J	Cross-section code

XA	XB	XC
Plain ring	Plain ring with scarf cut [1]	Spiral ring [1]
		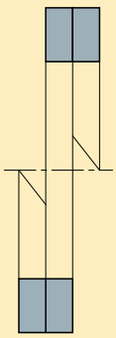

Fig. 6.5 – Standard anti-extrusion ring types for elastomeric O-rings.

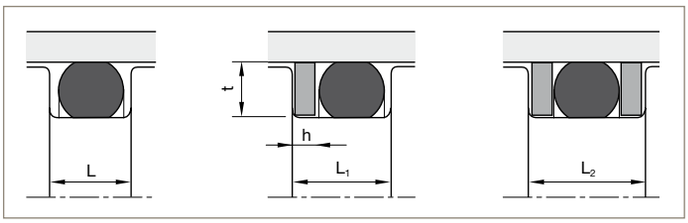

Notes

1) Scarf-cut rings and spiral rings are intended for installation in fully closed-grooves.
2) A spiral anti-extrusion ring consists of two spiral windings which are cut at the ends and allows for compensating for large temperature variations and tolerances by means of a screw-like elongation or contraction. Only to be used in reciprocating applications.
3) In case of single-acting O-rings, it is sufficient to install only one anti-extrusion ring on the downstream side of the O-ring. In case of a double-acting sealing function, two anti-extrusion rings are required at each side of the O-ring.
4) Installation grooves should preferably be made with parallel side walls. If for machining reasons this is not possible, a maximum deviation of 5° is allowed.
5) Anti-extrusion rings with concave face on the O-ring side are recommended in case of wide or out-of-tolerance bores and shafts.
Additionally, this type of anti-extrusion ring extends the operating pressure of the O-ring and its specific shape tends to keep the O-ring round, even under high-pressure, resulting in better seal performance.
Please contact our consultancy service for more information.

Series No.	Series No.	Series No.	Cross-section	Cross-section	Back-up	Groove depth static	Groove depth Dyn. Hydr.	Groove depth Dyn. Pneum.	Groove width Without back-up ring	Groove width 1 back-up	Groove width 2 back-ups
XA	XB	XC		(mm)	h (mm)	(X)	(Y) t (mm)	(Z)	L (mm)		
0901	0902	0903	A	1.78	1.0 ±0.1	1.30±0.05	1.45±0.02	1.55±0.02	2.4 +0.2 -0,0	3.4 +0.2 -0,0	4.4 +0.2 -0,0
0901	0902	0903	B	2.00	1.0 ±0.1	1.50±0.05	1.65±0.02	1.75±0.02	2.7 +0.2 -0,0	3.7 +0.2 -0,0	4.7 +0.2 -0,0
0901	0902	0903	C	2.40	1.5 ±0.1	1.85±0.05	2.00±0.02	2.10±0.02	3.3 +0.2 -0,0	4.7 +0.2 -0,0	6.1 +0.2 -0,0
0901	0902	0903	D	2.50	1.5 ±0.1	1.95±0.05	2.10±0.02	2.20±0.02	3.4 +0.2 -0,0	4.9 +0.2 -0,0	6.4 +0.2 -0,0
0901	0902	0903	E	2.62	1.5 ±0.1	2.05±0.05	2.25±0.02	2.35±0.02	3.6 +0.2 -0,0	5.1 +0.2 -0,0	6.6 +0.2 -0,0
0901	0902	0903	F	3.00	1.5 ±0.1	2.40±0.05	2.55±0.02	2.70±0.02	4.2 +0.2 -0,0	5.7 +0.2 -0,0	7.2 +0.2 -0,0
0901	0902	0903	G	3.53	1.5 ±0.1	2.85±0.07	3.10±0.05	3.25±0.05	4.8 +0.2 -0,0	6.3 +0.2 -0,0	7.8 +0.2 -0,0
0901	0902	0903	H	4.00	1.5 ±0.1	3.25±0.07	3.50±0.05	3.65±0.05	5.4 +0.2 -0,0	6.9 +0.2 -0,0	8.4 +0.2 -0,0
0901	0902	0903	I	5.00	2.0 ±0.1	4.15±0.10	4.45±0.05	4.65±0.05	6.8 +0.2 -0,0	8.8 +0.2 -0,0	10.8 +0.2 -0,0
0901	0902	0903	J	5.33	2.0 ±0.1	4.40±0.10	4.70±0.05	4.90±0.05	7.2 +0.2 -0,0	9.2 +0.2 -0,0	11.2 +0.2 -0,0
0901	0902	0903	K	5.70	2.0 ±0.1	4.70±0.10	5.10±0.05	5.30±0.05	7.7 +0.2 -0,0	9.9 +0.2 -0,0	12.0 +0.2 -0,0
0901	0902	0903	L	6.99	2.5 ±0.1	5.85±0.10	6.25±0.05	6.55±0.05	9.6 +0.2 -0,0	12.1 +0.2 -0,0	14.6 +0.2 -0,0
0901	0902	0903	M	8.40	2.5 ±0.1	7.00±0.10	7.55±0.05	7.90±0.05	11.5 +0.2 -0,0	14.6 +0.2 -0,0	17.6 +0.2 -0,0
0901	0902	0903	N	1.78	1.4 ±0.1	1.30±0.05	1.45±0.02	1.55±0.02	2.4 +0.2 -0,0	3.8 +0.2 -0,0	5.2 +0.2 -0,0
0901	0902	0903	O	2.00	1.4 ±0.1	1.50±0.05	1.65±0.02	1.75±0.02	2.7 +0.2 -0,0	4.1 +0.2 -0,0	5.5 +0.2 -0,0
0901	0902	0903	P	2.40	1.4 ±0.1	1.80±0.05	2.05±0.02	2.10±0.02	3.2 +0.2 -0,0	4.6 +0.2 -0,0	6.0 +0.2 -0,0
0901	0902	0903	Q	2.50	1.4 ±0.1	1.90±0.05	2.15±0.02	2.20±0.02	3.3 +0.2 -0,0	4.7 +0.2 -0,0	6.1 +0.2 -0,0
0901	0902	0903	R	2.62	1.4 ±0.1	2.00±0.05	2.25±0.02	2.35±0.02	3.6 +0.2 -0,0	5.0 +0.2 -0,0	6.4 +0.2 -0,0
0901	0902	0903	T	3.00	1.4 ±0.1	2.30±0.05	2.60±0.02	2.70±0.02	4.0 +0.2 -0,0	5.4 +0.2 -0,0	6.8 +0.2 -0,0
0901	0902	0903	U	3.53	1.4 ±0.1	2.70±0.07	3.10±0.05	3.25±0.05	4.8 +0.2 -0,0	6.2 +0.2 -0,0	7.6 +0.2 -0,0
0901	0902	0903	V	4.00	1.4 ±0.1	3.10±0.07	3.50±0.05	3.65±0.05	5.5 +0.2 -0,0	6.9 +0.2 -0,0	8.6 +0.2 -0,0
0901	0902	0903	W	5.00	1.7 ±0.1	4.00±0.10	4.40±0.05	4.65±0.05	6.6 +0.2 -0,0	8.3 +0.2 -0,0	10.0 +0.2 -0,0
0901	0902	0903	X	5.33	1.7 ±0.1	4.30±0.10	4.70±0.05	4.90±0.05	7.1 +0.2 -0,0	8.8 +0.2 -0,0	10.5 +0.2 -0,0
0901	0902	0903	Y	5.70	1.7 ±0.1	4.60±0.10	5.00±0.05	5.30±0.05	7.2 +0.2 -0,0	8.9 +0.2 -0,0	10.6 +0.2 -0,0
0901	0902	0903	Z	6.99	2.5 ±0.1	5.80±0.10	6.10±0.05	6.55±0.05	9.5 +0.2 -0,0	12.0 +0.2 -0,0	14.5 +0.2 -0,0

Table 6.6 – Housing dimensions for anti-extrusion rings for O-rings.

6.3 Anti-extrusion ring materials

Table 6.7 shows a selection of Parker's preferred anti-extrusion ring materials.

Please start by making an initial, possibly multiple, selection of all materials with appropriate application descriptions and service temperature ranges. The final selection may then be made using the performance rating values for a material with the best combination of characteristics for the intended service.

For guidance on selecting a material other than the ones listed (i.e. filled PEEK, polyimide, filled PTFE, …) please contact our consultancy service.

Code	Description	Colour
001	Virgin PTFE	White
004	PTFE + Bronze	Bronze
007	PTFE + Carbon/Graphite	Black
013	PTFE + Glass fibre	White
015	Virgin PEEK	Tan
025	PTFE + Glass fibre	Dark green
031	Modified PTFE + Glass fibre	Ivory
045	PTFE + Carbon Fibre	Black
0K2	Reinforced lubricated PEEK	Black

Table 6.7 – Anti-extrusion ring materials.

Note
1) High-temperature end is subject to extrusion gap guidelines.
2) 1 is lowest, 10 is highest rating.

Applications	Temperature range (°C) [1]	Pressure/ extrusion resistance [2]	Chemical compatibility [2]	FDA-compliant	NORSOK M-710 compliant	Minimum recommended dynamic surface hardness (HRC)
Low-strength material. Only used in combination with elastomeric O-rings.	-260 +260	1	5	Yes	No	25
Limitations in use because of chemical compatibility.	-260 +300	5	2	No	No	45
Particularly suited for highly corrosive service. Widely used in dynamic steam and water applications. Performs well in non-lubricated dynamic systems.	-260 +300	4	4	No	No	50
Only to be used against hard dynamic mating surfaces. Do not use with strong bases or hydrofluoric acid.	-260 +300	3	4	No	No	60
Very strong material with high temperature resistance. Static use or slow, intermittently dynamic.	-200 +315	9	4	Yes	Yes	50
Only use on very hard mating surfaces in case of dynamic service. Do not use with strong bases or hydrofluoric acid.	-260 +300	3	4	No	No	60
Only use on very hard mating surfaces in case of dynamic service. Do not use with strong bases or hydrofluoric acid.	-260 +300	5	4	No	Yes	60
Excellent wear behaviour in aquaeous environment.	-260 +280	4	4	No	Yes	50
Very strong material with high temperature resistance. Intended for dynamic service.	-200 +315	10	4	No	Yes	50

Guide rings and tapes prevent metallic contact between pistons and cylinders or rods and bores where forces act perpendicular to the direction of movement.
These lateral forces (F) lead to a pressure distribution as shown in fig. 7.1. In practice, calculation based on the projected surface has proved to be a simple and more useful method. This means that the load carrying area (A) can be calculated from the length (H) multiplied by the diameter (D) (see fig. 7.2). The surface obtained is about 5 times larger than the assumed bearing area of fig. 7.1, so that lower specific loads must be reckoned with. In order to obtain the same values for lateral forces “F”, the specific load must be only 1/5 of the max. force shown in fig. 7.1. The indicated permissible specific forces ($F_{perm.}$) take this into account and the admissible specific pressure mentioned relates to the projected area as shown in fig. 7.2.

The values of the gaps “e” or shoulder diameters specified in drawings and tables guarantee maximum efficiency of the guiding elements.
For operation together with a seal, however, the extrusion gap specified for this particular seal is most important. Especially under high pressure the maximum gap behind the seal must be the basis for the determining the piston-shoulder diameter between seal and guiding tape. If the specified nominal measurements and tolerances are used to calculate the groove bottom diameter of the guiding tapes, optimum guidance quality will be obtained and metallic contact prevented.

Figure:
H = Length of the guiding tape

Contents		Page
F2	Pneumatics	172
F3/FW	Hydraulics	176
FS	Hydraulics	180

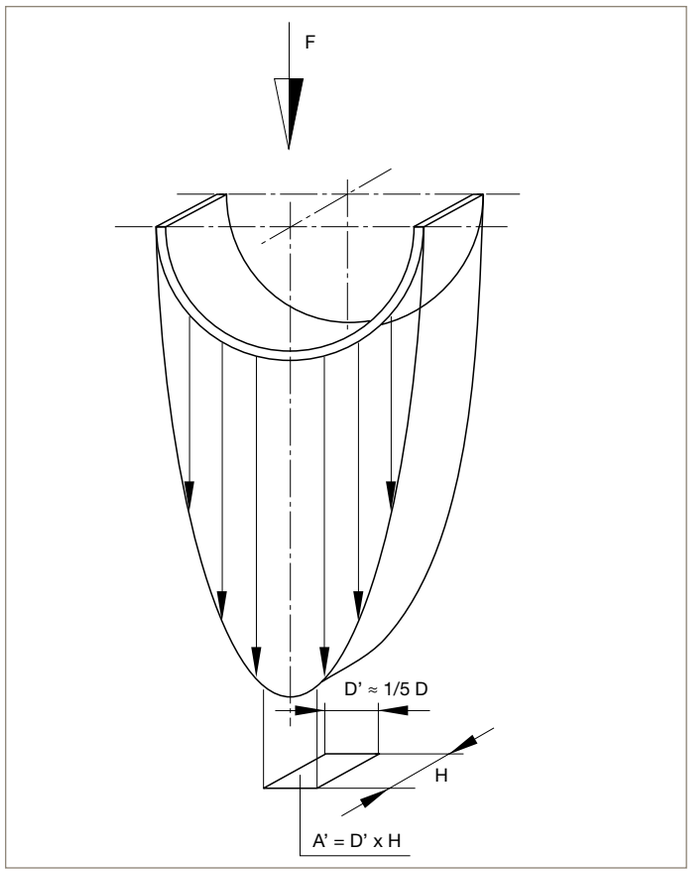

Fig. 7.1 – Pressure distribution on bearing area

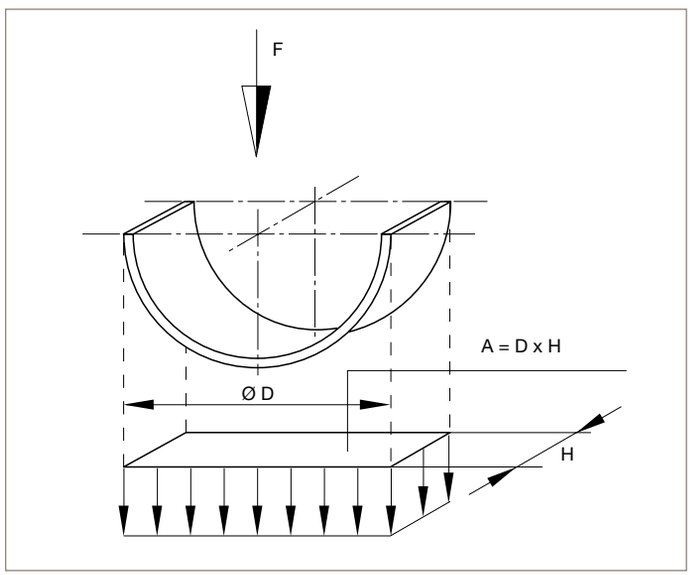

Fig. 7.2 – Simplified pressure distribution on bearing area

The PTFE guiding tape profile F2 is specially designed for use in pneumatic cylinders.

Advantages

- Due to application-optimized geometry and compounds suitable for use in lubricated as well as in oil-free air (after initial lubrication on assembly).
- Vibration absorption effect.
- Very good emergency running properties in low-lube conditions.
- High load capacity (compressive strength), low wear and reduced friction due to special carbon additive in PTFE material.
- Dimensions according to ISO 10766.
- Also available as bulk material.
- Suitable for cylinder repairs.
- Ideally suited for large-diameter.
- Bulk material.
- Installation in closed and undercut housings.

Range of Application

Operating temperature	-100 to +200 °C
Surface speed	≤ 10.0 m/s
Permissible specific load q at operating temperature < 100 °C:	2.5 N/mm²

Compounds

Polon® 033, PTFE + carbon.

Installation

The gap dimensions “e” guarantee optimum service life of the guiding tapes. For the seals, however, the gaps as mentioned on the respective catalogue pages are to be considered when it is essential to observe full operating conditions (“Range of Application”).

The inner diameter of the groove can be calculated by:
d = D - 2S.
The gap “e” between cylinder and piston is the maximum value and should not be exceeded.

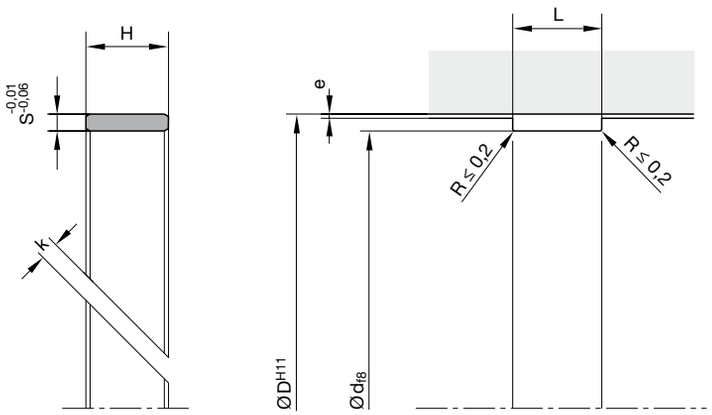

Housing dimensions

Series No.	Guiding tape	Groove			
	S (mm)	L (mm)	H (mm)	d (mm)	e (mm)
15040	1.55	4.0 +0.1	3.9 -0.15	D - 3.1	0.25
15050	1.55	5.0 +0.1	4.9 -0.15	D - 3.1	0.25
15080	1.55	8.0 +0.1	7.8 -0.20	D - 3.1	0.25
15090	1.55	9.0 +0.1	8.8 -0.20	D - 3.1	0.25
15100	1.55	10.0 +0.1	9.8 -0.20	D - 3.1	0.25
15120	1.55	12.0 +0.1	11.8 -0.20	D - 3.1	0.25
15130	1.55	13.0 +0.1	12.8 -0.20	D - 3.1	0.35
15150	1.55	15.0 +0.1	14.8 -0.30	D - 3.1	0.35
15200	1.55	20.0 +0.1	19.5 -0.40	D - 3.1	0.35
15250	1.55	25.0 +0.1	24.5 -0.40	D - 3.1	0.35

Ordering example

Mating surface	aluminum
Piston diameter	32 mm
Groove	1.5 x 4.0 mm
a) by the metre	F2 0000 033 15040 A (4.0 x 1.5)
F2	Profile
0000	-
033	Compound
15040	Series no.
A	Type of cut (45°)
b) cut to length	F2 0320 033 15040 A (4.0 x 1.5 x 94.0)
F2	Profile
0320	Piston diameter x 10
033	Compound
15040	Series no.
A	Type of cut (45°)

Calculation of the stretched length “U”

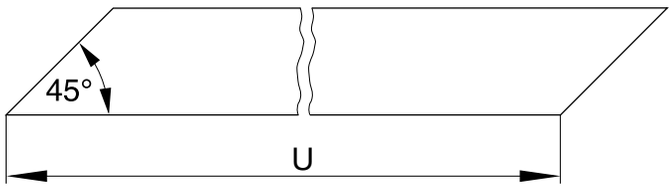

The length “U” of the tape is to be calculated from the mean circumferential length less the clearance at the joint “k”. The k values stated in the table are based on a temperature rise of 120 °C.

Cyl.	Stretched length U		Gap
Ø D^{H11}	Piston	Tol.	k
≤ 45	$U = \pi \cdot (D-S) - k$	± 0.25	1.8
> 45		± 0.40	3.5
> 80		± 0.60	4.4
> 100		± 0.80	5.6
> 125		± 1.00	6.6
> 150		± 1.20	8.0
> 180		± 1.40	9.5
> 215		± 1.60	12.0
> 270		± 1.80	15.5
> 330		± 2.00	19.0

Selection of the guiding height H

The height H of the guiding tape has to be calculated for the worst possible conditions considering the maximum radial force. The specific load at the tape in case of operating temperatures of ≤ 100 °C should not exceed q = 2.5 N/mm². The calculation of this figure is based on the area from the projection of the height H of the guiding tape multiplied by the cylinder diameter D. The maximum permissible radial force $F_{perm.}$ can be obtained with the formula: $F_{perm.} = H \times D \times q_{perm.}$

Specific data can be found in the nomograph.

Example:
A guiding tape diameter D of 70 mm and a guiding tape height of 8 mm result in a maximum permissible radial force of 0.14 kN or 140 N.

Nomograph for calculating of the specific load

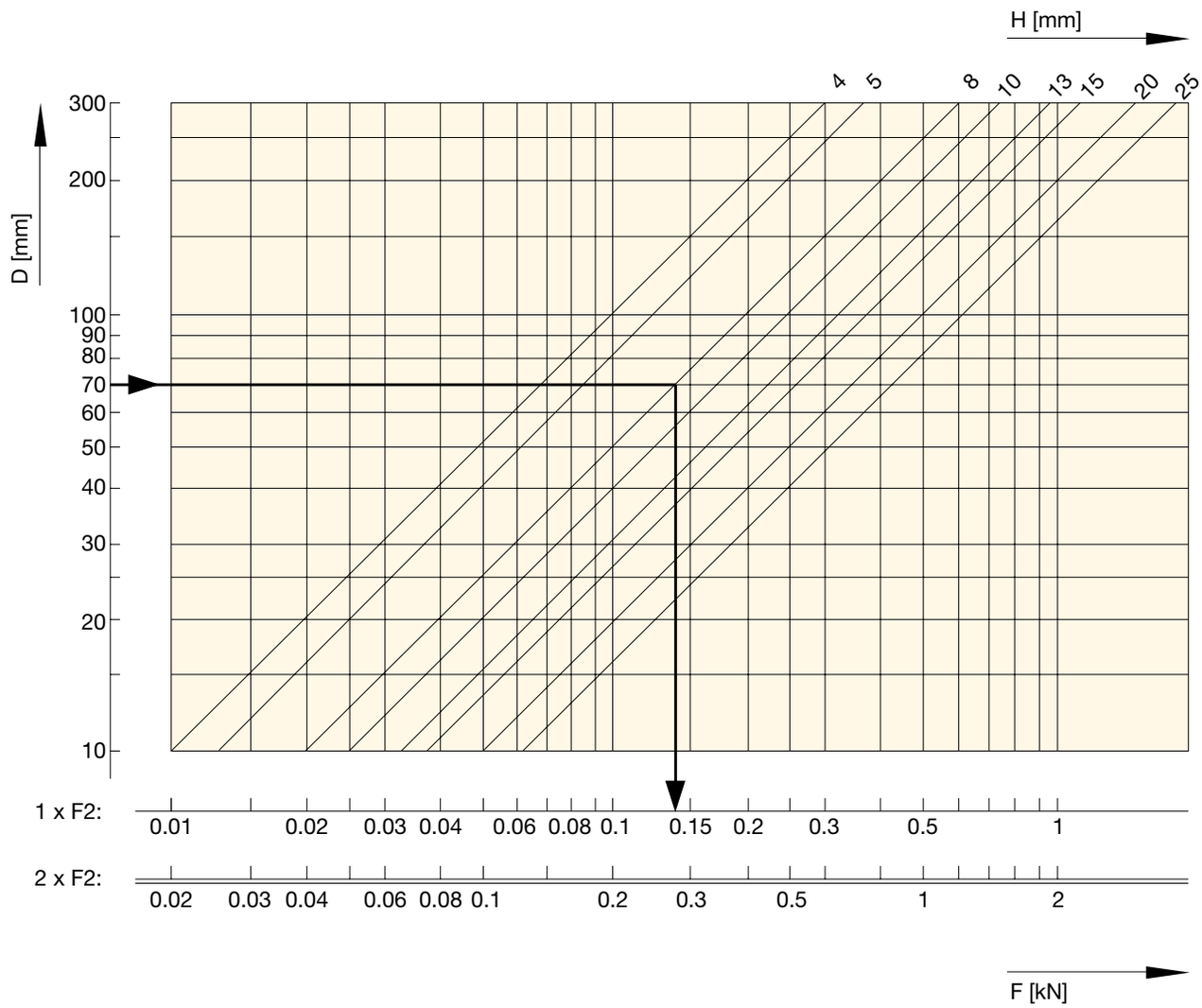

The guiding tape profile F3 is specially designed for use in hydraulic cylinders.

Advantages

- Vibration absorption effect.
- Very good emergency running properties in low-lube conditions.
- High load capacity (compressive strength), low wear and reduced friction due to special bronze additive in PTFE material.
- Dimensions according to ISO 10766.
- Also available as bulk material.
- Suitable for cylinder repairs.
- Ideally suited for large-diameter.
- Bulk material.
- Installation in closed and undercut housings.

Range of Application

Operating temperature	-100 to +200 °C
Surface speed	≤ 5.0 m/s

Compounds

Standard: Polon® 052, PTFE + 40 % bronze
On request: Polon® 062, PTFE + 60 % bronze

For cylinders made of alloys, light metal and high-grade steel, we recommend the use of compound Polon® 033 (PTFE + 25 % carbon).

Installation

The gap dimensions “e” guarantee optimum service life of the guiding tapes. For the seals, however, the gaps as mentioned on the respective catalogue pages are to be considered when it is essential to observe full operating conditions (“Field of Application”) for the seals.

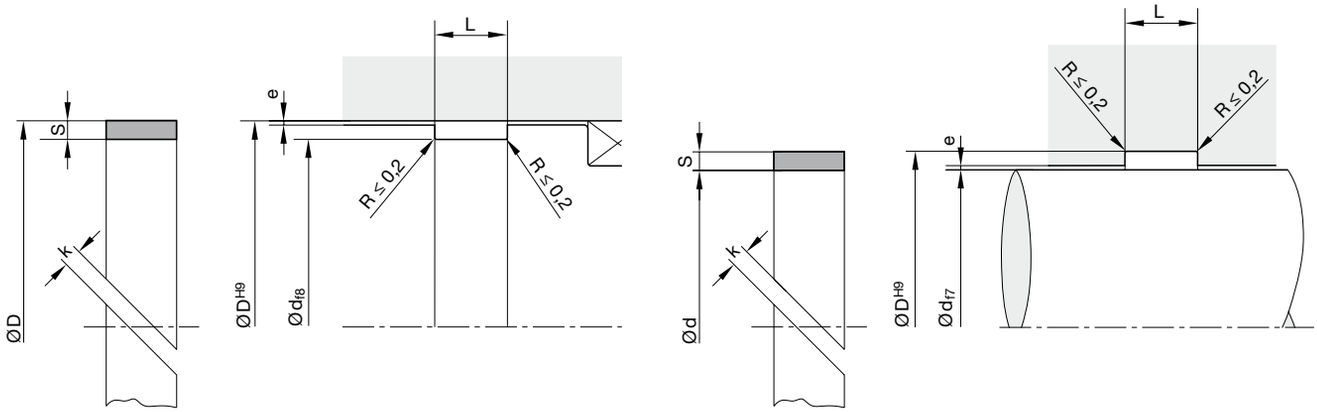

Surfaces

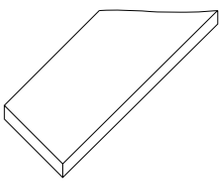

Guiding tape F3:
smooth (standard)

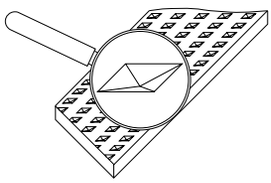

Guiding tape FW:
structured (on request)

Type of cut

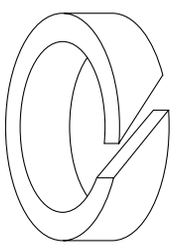

Type A
angle cut

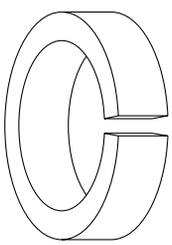

Type S
straight cut

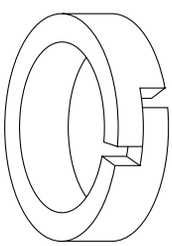

Type Z
step cut

Types A and S are used for bearings where it is imperative that the system pressure is carried on to the seals. They are designed as “open bearing” with a well defined gap. Type Z is a closed bearing, which in certain applications is used as a combined seal and bearing.

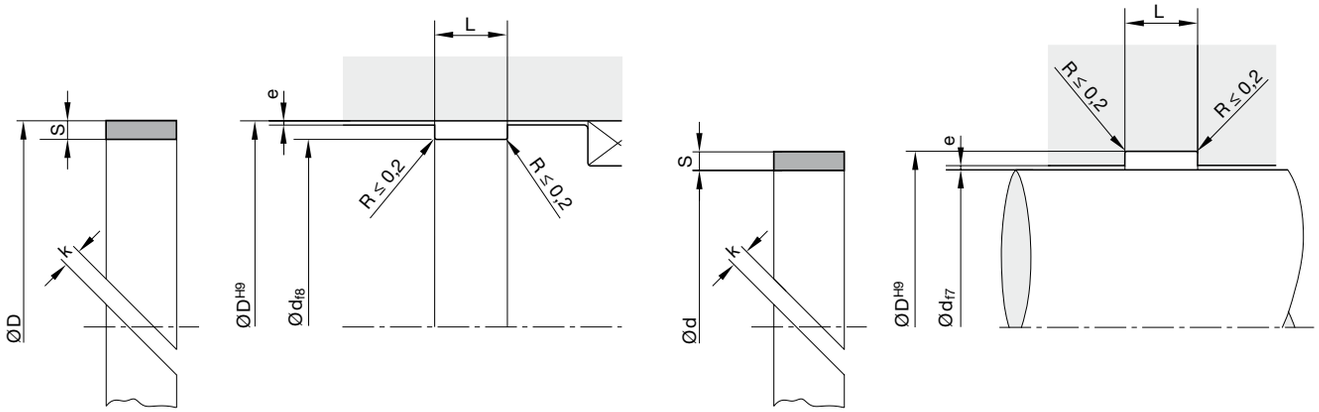

Housing dimensions

Series No.	Recommended Ø range	Guiding tape	Groove			
	d/D (mm)	S (mm)	L (mm)	d (mm)	D (mm)	e (mm)
15063	≤ 50	$1.50^{+0.02}_{-0.03}$	$6.3^{+0.1}$	D - 3.0	d + 3.0	0.25
15081	≤ 50	$1.50^{+0.02}_{-0.03}$	$8.1^{+0.1}$	D - 3.0	d + 3.0	0.25
15100	≤ 50	$1.50^{+0.02}_{-0.03}$	$10.0^{+0.1}$	D - 3.0	d + 3.0	0.25
15150	≤ 50	$1.50^{+0.02}_{-0.03}$	$15.0^{+0.1}$	D - 3.0	d + 3.0	0.25
16025	≤ 50	$1.55^{+0.02}_{-0.03}$	$2.5^{+0.1}$	D - 3.1	d + 3.1	0.25
16040	≤ 51	$1.55^{+0.02}_{-0.03}$	$4.0^{+0.1}$	D - 3.1	d + 3.1	0.25
20063	≤ 50	$2.00^{-0.05}$	$6.3^{+0.1}$	D - 4.0	d + 4.0	0.30
20081	≤ 51	$2.00^{-0.05}$	$8.1^{+0.1}$	D - 4.0	d + 4.0	0.30
20097	> 50	$2.00^{-0.05}$	$9.7^{+0.1}$	D - 4.0	d + 4.0	0.30
20150	> 50	$2.00^{-0.05}$	$15.0^{+0.2}$	D - 4.0	d + 4.0	0.30
20200	> 50	$2.00^{-0.05}$	$20.0^{+0.2}$	D - 4.0	d + 4.0	0.30
25042	> 50	$2.50^{-0.05}$	$4.2^{+0.1}$	D - 5.0	d + 5.0	0.40
25056	> 50	$2.50^{-0.05}$	$5.6^{+0.1}$	D - 5.0	d + 5.0	0.40
25063	> 50	$2.50^{-0.05}$	$6.3^{+0.1}$	D - 5.0	d + 5.0	0.40
25081	> 50	$2.50^{-0.05}$	$8.1^{+0.1}$	D - 5.0	d + 5.0	0.40
25097	> 50	$2.50^{-0.05}$	$9.7^{+0.1}$	D - 5.0	d + 5.0	0.40
25150	> 50	$2.50^{-0.05}$	$15.0^{+0.2}$	D - 5.0	d + 5.0	0.40
25200	> 50	$2.50^{-0.05}$	$20.0^{+0.2}$	D - 5.0	d + 5.0	0.40
25250	> 50	$2.50^{-0.05}$	$25.0^{+0.2}$	D - 5.0	d + 5.0	0.40
25300	> 50	$2.50^{-0.05}$	$30.0^{+0.2}$	D - 5.0	d + 5.0	0.40

Ordering example piston guidance

Mating surface	steel
Surface	smooth
Piston diameter	80 mm\
Groove	2.5 x 9.7 mm
a) by the metre	F3 0000 052 25097 A (9.7 x 2.5)
b) cut to length	F3 0800 052 25097 A (9.7 x 2.5 x 239.0)
F3	Profile
0800	Piston diameter x 10 (by the meter: 0000)
052	Compound
25097	Series no.

Ordering example rod guidance

Surface	structured
Rod diameter	50 mm
(Groove outer diameter	OD = ID + 2S)
Groove	2.5 x 6.3 mm

FW 0550 052 25063 A (6.3 x 2.5 x 160.0)

Calculation of the stretched length "U"

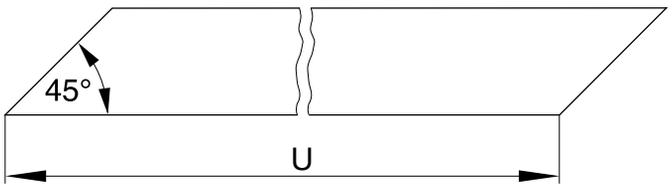

The length “U” of the tape is to be calculated from the mean circumferential length less the clearance at the joint “k”. The k values stated in the table are based on a temperature rise of 120 °C.

Cyl. Ø D^{H8}	Stretched length U			Gap
Rod Ø d_{f7}	Piston	Rod	Tol.	k
≤ 45	$U = \pi \cdot (D-S) - k$	$U = \pi \cdot (d+S) - k$	± 0.25	1.8
> 45			± 0.40	3.5
> 80			± 0.60	4.4
> 100			± 0.80	5.6
> 125			± 1.00	6.6
> 150			± 1.20	8.0
> 180			± 1.40	9.5
> 215			± 1.60	12.0
> 270			± 1.80	15.5
> 330			± 2.00	19.0

Selection of the axial guiding width L

Choose the appropriate curve for the applicable guide tolerances. Note that the more precise the guidance the lower the value for the selected eps.
The following formula provides the minimum guidance width:

$$L \geq \frac{F}{Q\,(d_i - k \cdot \sqrt{2})}$$

d = inner diameter [mm]
k = gap [mm]
L = guidance width [mm]
$Q_{perm.}$ = permissible specific load [N/mm²]
F = lateral force [N]

We recommend that the largest possible guidance length always be used even if the calculation yields a smaller value.

Permissible specific load $Q_{perm.}$ in relation to temperature t and the respective permanent set ε for the compounds Polon® 052:

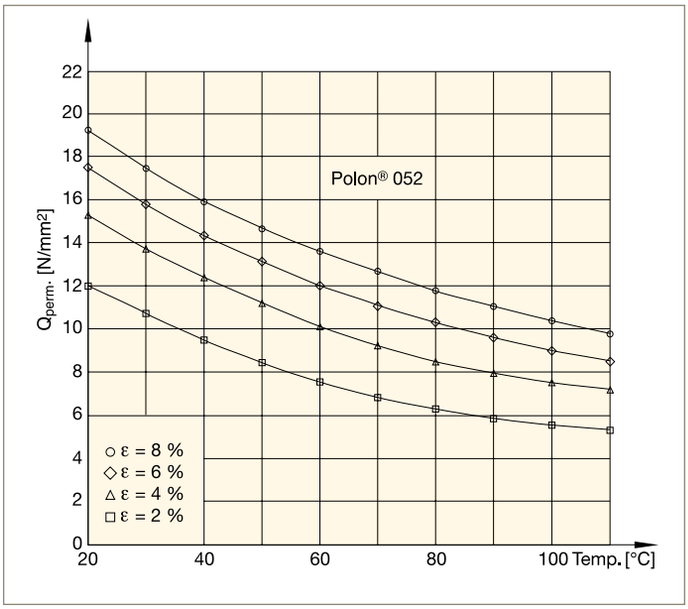

Permissible specific load $Q_{perm.}$ in relation to temperature t and the respective permanent set ε for the compounds Polon® 062:

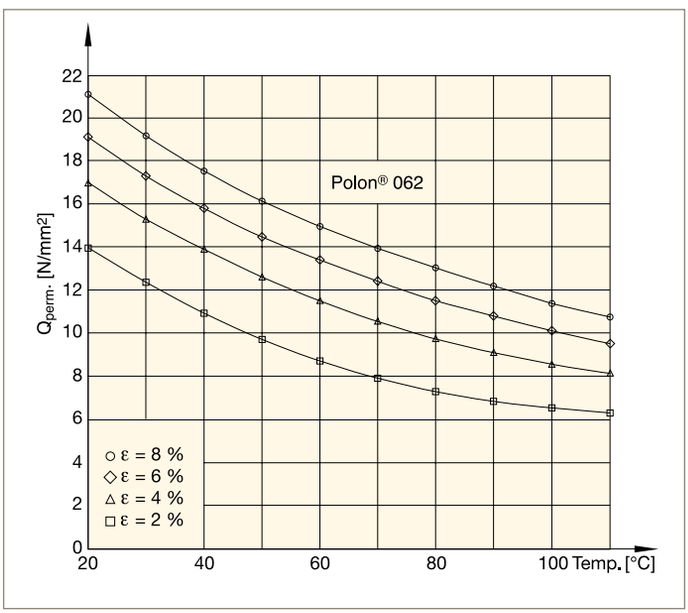

The chamfered guiding tape profile FS is specially designed for use in hydraulic cylinders. This profile offers important features in comparison to the alternative standard profile F3.

The chamfers
- compensate for the rounding in the bottom/top of the groove.
- support easy installation of hardware e.g. the cylinder tube. It functions as an additional “lead-in chamfer”.
- reduce the risk of cold-flow extrusion in the gap between the hardware.
- support the lubrication oil film between the guiding element and the opposing dynamic surface hardware.

Advantages
- Vibration absorption effect.
- Very good emergency running properties in low-lube conditions.
- High load capacity (compressive strength), low wear and reduced friction due to special bronze additive in PTFE material.
- Dimensions according to ISO 10766.
- Also available as bulk material.
- Suitable for cylinder repairs.
- Ideally suited for large-diameter.
- Bulk material.
- Installation in closed and undercut housings.

Range of Application

Operating temperature	-100 to +200 °C
Surface speed	≤ 5.0 m/s

Compounds
Standard: Polon® 052, PTFE + 40 % bronze
On request: Polon® 062, PTFE + 60 % bronze

For cylinders made of alloys, light metal and high-grade steel, we recommend the use of compound Polon® 033 (PTFE + 25 % carbon).

Installation
The gap dimensions “e” guarantee optimum service life of the guiding tapes. For the seals, however, the gaps as mentioned on the respective catalogue pages are to be considered when it is essential to observe full operating conditions (“Field of Application”) for the seals.

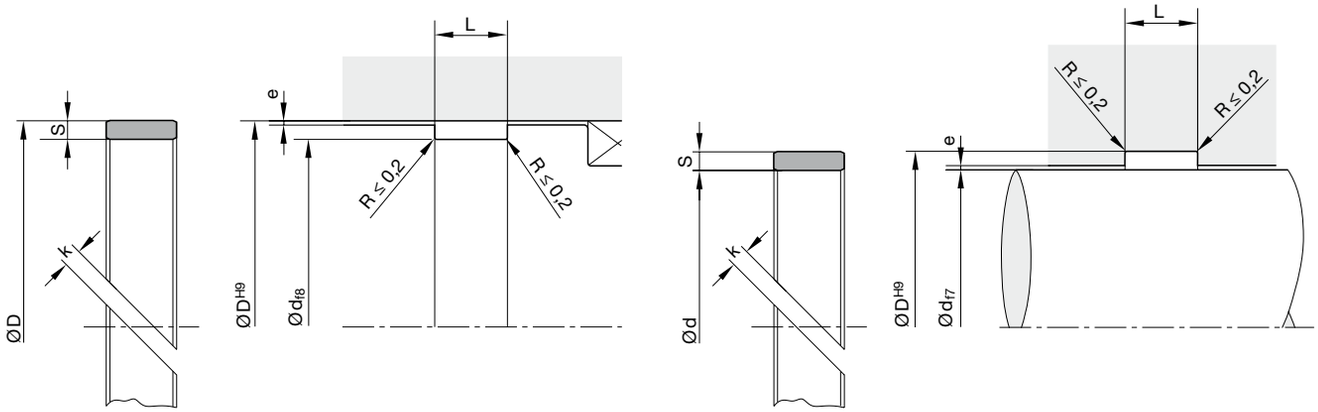

Surfaces

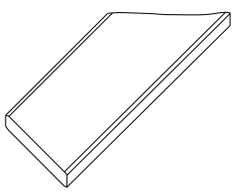

Guiding tape FS:
smooth (standard)

Type of cut

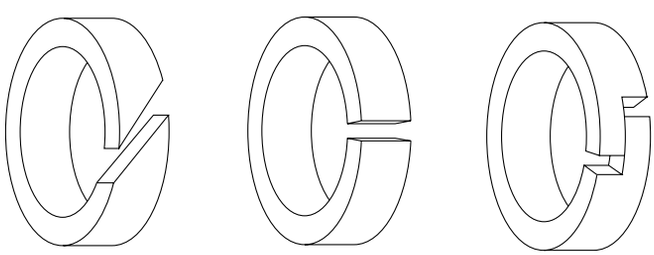

Type A
angle cut

Type S
straight cut

Type Z
step cut

Types A and S are used for bearings where it is imperative that the system pressure is carried on to the seals. They are designed as “open bearing” with a well defined gap. Type Z is a closed bearing, which in certain applications is used as a combined seal and bearing.

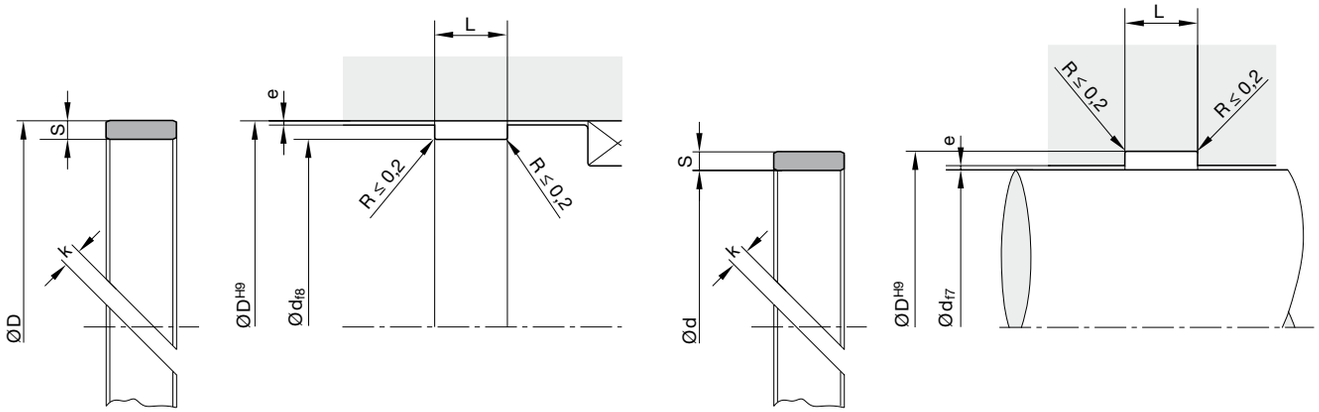

Housing dimensions

Series No.	Recommended Ø range	Guiding tape	Groove			
	d/D (mm)	S (mm)	L (mm)	d (mm)	D (mm)	e (mm)
15063	≤ 50	$1.50^{+0.02}_{-0.03}$	6.3 $^{+0.1}$	D - 3.0	d + 3.0	0.25
15100	≤ 50	$1.50^{+0.02}_{-0.03}$	10.0 $^{+0.1}$	D - 3.0	d + 3.0	0.25
20063	≤ 50	$2.00^{+0.02}_{-0.03}$	6.3 $^{+0.1}$	D - 4.0	d + 4.0	0.30
20081	≤ 50	$2.00^{+0.02}_{-0.03}$	8.1 $^{+0.1}$	D - 4.0	d + 4.0	0.30
20097	> 50	$2.00^{+0.02}_{-0.03}$	9.7 $^{+0.1}$	D - 4.0	d + 4.0	0.30
20150	> 50	$2.00^{-0.05}$	15.0 $^{+0.2}$	D - 4.0	d + 4.0	0.30
20200	> 50	$2.00^{-0.05}$	20.0 $^{+0.2}$	D - 4.0	d + 4.0	0.30
25042	> 50	$2.50^{-0.05}$	4.2 $^{+0.1}$	D - 5.0	d + 5.0	0.40
25056	> 50	$2.50^{-0.05}$	5.6 $^{+0.1}$	D - 5.0	d + 5.0	0.40
25063	> 50	$2.50^{-0.05}$	6.3 $^{+0.1}$	D - 5.0	d + 5.0	0.40
25081	> 50	$2.50^{-0.05}$	8.1 $^{+0.1}$	D - 5.0	d + 5.0	0.40
25097	> 50	$2.50^{-0.05}$	9.7 $^{+0.1}$	D - 5.0	d + 5.0	0.40
25150	> 50	$2.50^{-0.05}$	15.0 $^{+0.2}$	D - 5.0	d + 5.0	0.40
25200	> 50	$2.50^{-0.05}$	20.0 $^{+0.2}$	D - 5.0	d + 5.0	0.40
25250	> 50	$2.50^{-0.05}$	25.0 $^{+0.2}$	D - 5.0	d + 5.0	0.40
25300	> 50	$2.50^{-0.05}$	30.0 $^{+0.2}$	D - 5.0	d + 5.0	0.40

Ordering example piston guidance

Mating surface	steel
Surface	smooth
Piston diameter	80 mm
Groove	2.5 x 9.7 mm
a) by the metre	FS 0000 052 25097 A (9.7 x 2.5)
b) cut to length	FS 0800 052 25097 A (9.7 x 2.5 x 239.0)
FS	Profile
0800	Piston diameter x 10 (by the meter: 0000)
052	Compound
25097	Series no.

Calculation of the stretched length "U"

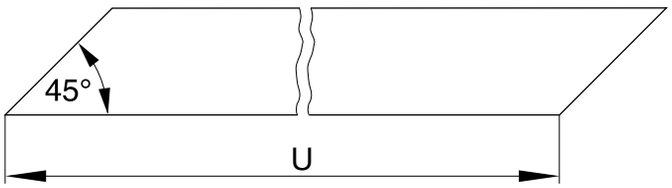

The length “U” of the tape is to be calculated from the mean circumferential length less the clearance at the joint “k”. The k values stated in the table are based on a temperature rise of 120 °C.

Cyl. Ø D^{H8}	Stretched length U			Gap
Rod Ø d_{f7}	Piston	Rod	Tol.	k
≤ 45	$U = \pi \cdot (D-S) - k$	$U = \pi \cdot (d+S) - k$	± 0.25	1.8
> 45			± 0.40	3.5
> 80			± 0.60	4.4
> 100			± 0.80	5.6
> 125			± 1.00	6.6
> 150			± 1.20	8.0
> 180			± 1.40	9.5
> 215			± 1.60	12.0
> 270			± 1.80	15.5
> 330			± 2.00	19.0

Selection of the axial guiding width L

Choose the appropriate curve for the applicable guide tolerances. Note that the more precise the guidance the lower the value for the selected eps.
The following formula provides the minimum guidance width:

$$L \geq \frac{F}{Q\,(d_i - k \cdot \sqrt{2})}$$

d = inner diameter [mm]
k = gap [mm]
L = guidance width [mm]
$Q_{perm.}$ = permissible specific load [N/mm²]
F = lateral force [N]

We recommend that the largest possible guidance length always be used even if the calculation yields a smaller value.

Permissible specific load $Q_{perm.}$ in relation to temperature t and the respective permanent set ε for the compounds Polon® 052:

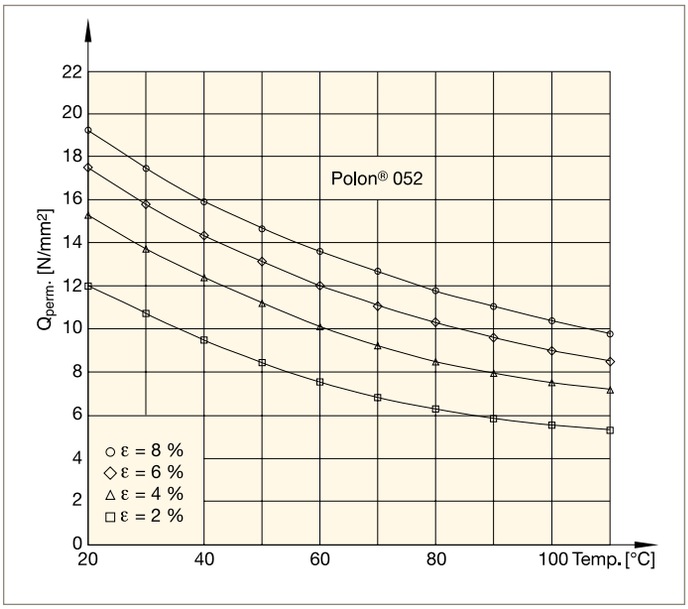

Permissible specific load $Q_{perm.}$ in relation to temperature t and the respective permanent set ε for the compounds Polon® 062:

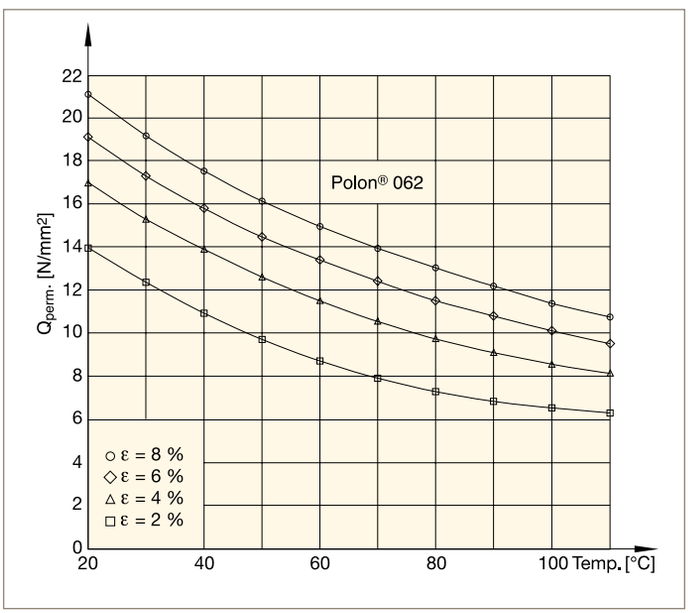

8. Application data sheet

If you require assictance, please photocopy these three pages. Fill in the required information and fax to +32 3 888 48 62 or e-mail to packing-europe@parker.com. Use the information below and other information in this catalogue to determine the dimensions needed. We will contact you to discuss your specific application and make recommendations. If you require assistance in completing this form, please call our consultancy service at +32 3 880 81 50.

Parker Hannifin Corporation
Advanced Products N.V.
Rupelweg 9
2850 Boom
Belgium
Tel. +32 3 880 81 50
Fax +32 3 888 48 62
www.parker.com

Referred by . . . . . .
Lead # . . . . . .

To be completed by Parker

Project # . . . . . .
Date Entered . . . . . .
Date Required . . . . . .
Prepared by . . . . . .
Territory Mgr. . . . . .
Distributor . . . . . .
. . . . . .
Dist Sales . . . . . .

Company . . . . . .
Address . . . . . .
City . . . . . State . . . . . .
Contact . . . . . Title . . . . . .
Alt. contact . . . . . Title . . . . . .

Fax number . . . . . .
P.O. Box . . . . . Mail stop . . . . . .
Postal code . . . . . Country . . . . . .
Phone . . . . . Ext . . . . . .
Phone . . . . . Ext . . . . . .
E-mail . . . . . .

Equipment/application . . . . . Model no. . . . . .
Existing seal manufacturer . . . . . Part no. . . . . .
Customer . . . . . Part no. . . . . .

Reason for change ❑ Performance ❑ Delivery ☐ New application ❑ Price
Current price . . . . . @ . . . pcs. Monthly usage . . . . Hours operation . . . . . Hours serv. life. . . . . .
Target price . . . . . @ . . . pcs. Quote qty. . . . . Proto qty. . . . . Date proto req'd. . . . . .
Special inspection requirements ❑ Yes ❑ No Special packaging requirements ❑ Yes ❑ No
Explain . . . . . .

Motion

❑ Static ❑ Reciprocating ❑ Oscillatory ❑ Rotary

Product type

❑ Rod/shaft ❑ Wiper
❑ Piston ❑ Bearing/guiding type
❑ Internal face ❑ Non-seal
❑ External face

Operating parameters	Unit (circle one)	Minimum	Operating	Maximum
Temperature	°K °F °C	. . . . .	. . . . .	. . . . .
Pressure	Psi bar MPa	. . . . .	. . . . .	. . . . .
Stroke length (reciprocating)	Inch mm	. . . . .	. . . . .	. . . . .
Cycle rate	/min /hr Hz	. . . . .	. . . . .	. . . . .
Degree of arc oscillating	Degrees	. . . . .	. . . . .	. . . . .
Velocity	ft/s m/s	. . . . .	. . . . .	. . . . .
Vacuum	in.Hg Torr	. . . . .	. . . . .	. . . . .

Media to be sealed . . . . . .

❑ Rod

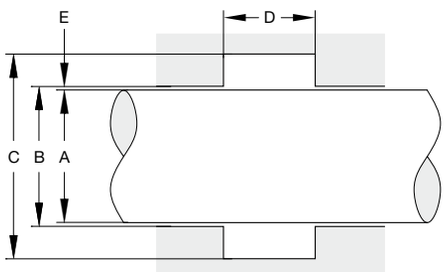

❑ Piston

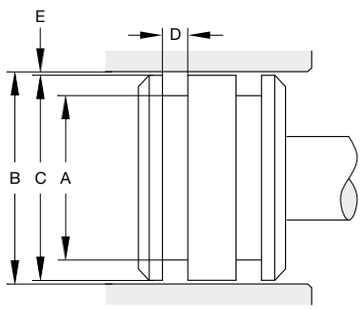

❑ Face seal

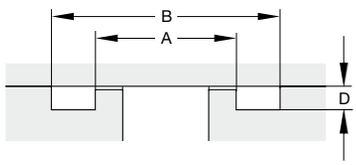

❑ Other rod

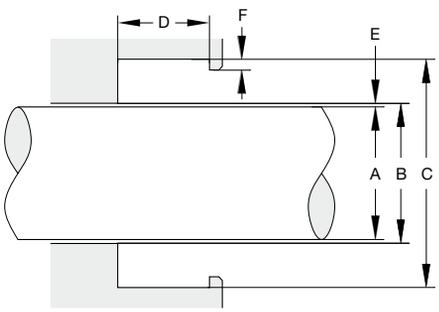

❑ Other piston

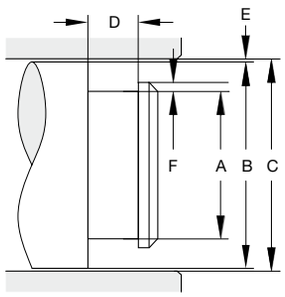

Hardware specifications	Hardware drawings included	❑ Yes ❑ No		
A Diameter	Min. . . . . Max.	Hardness	Finish	Mat'l . . . . .
B Diameter	Min. . . . . Max.	Hardness	Finish	Mat'l . . . . .
C Diameter	Min. . . . . Max.	Hardness	Finish	Mat'l . . . . .
D Groove width	Min. . . . . Max.	Can hardware be changed	❑ Yes	❑ No
E Radial clearance	Min. . . . . Max.	How?		
F Rod/piston step height	Min. . . . . Max.			
Side load	❑ lbs	❑ N		

Groove type

❑ Split ❑ Open
❑ Closed ❑ Stepped

Metric

❑ Yes
❑ No

Performance requirements

Breakout Friction . . . . . ❑ lbs ❑ N
Dynamic Friction . . . . . ❑ lbs ❑ N
Expected Life . . . . . ❑ cyc ❑ hrs ❑ yrs
Max. leakage . . . . . .
Most critical aspect . . . . . .
Contamination . . . . . .

9.1 Conversion tables

		Atmos-phere	bar	Inches of mer-cury	Inches of water	Millime-tres of mercury (Torr)	Millime-tres of water	kPa	MPa	N/m² (Pa)	psi
Atmos-phere	by	1	1.0133	29.9210	$4.0678x10^{-2}$	$7.6000x10^{-2}$	$1.0332x10^{-4}$	$1.0133x10^{-2}$	$1.0133x10^{-1}$	$1.0133x10^{-5}$	14.6960
bar	by	$9.8692x10^{-1}$	1	29.5300	$4.0146x10^{-2}$	$7.5006x10^{-2}$	$1.0197x10^{-4}$	$1.0000x10^{-2}$	$1.0000x10^{-1}$	$1.0000x10^{-5}$	14.5038
Inches of mercury	by	$3.3421x10^{-2}$	$3.3864x10^{-2}$	1	13.5950	25.4000	$3.4532x10^{-2}$	3.3864	$3.3864x10^{-3}$	$3.3864x10^{-3}$	$4.9116x10^{-1}$
Inches of water	by	$2.4584x10^{-3}$	$2.4840x10^{-3}$	$7.3556x10^{-2}$	1	1.8685	25.4000	$2.4910x10^{-1}$	$2.4610x10^{-4}$	$2.4910x10^{-2}$	$3.6128x10^{-2}$
Millimetres of mercury (Torr)	by	$1.3158x10^{-3}$	$1.3332x10^{-3}$	$3.9370x10^{-2}$	$5.3520x10^{-1}$	1	13.5950	$1.3332x10^{-1}$	$1.3332x10^{-4}$	$1.3332x10^{-2}$	$1.9337x10^{-2}$
Millimetres of water	by	$9.6787x10^{-5}$	$9.8068x10^{-5}$	$2.8959x10^{-3}$	$3.9370x10^{-2}$	$7.3556x10^{-2}$	1	$9.8068x10^{-3}$	$9.8068x10^{-6}$	9.8068	$1.4223x10^{-3}$
kPa	by	$9.8692x10^{-3}$	$1.0000x10^{-2}$	$2.9530x10^{-1}$	4.0146	7.5006	$1.0197x10^{-2}$	1	$1.0000x10^{-3}$	$1.0000x10^{-3}$	$1.4504x10^{-1}$
MPa	by	9.8692	10.0000	$2.9530x10^{-2}$	$4.0146x10^{-3}$	$7.5006x10^{-3}$	$1.0197x10^{-5}$	$1.0000x10^{-3}$	1	$1.0000x10^{-6}$	$1.4504x10^{-2}$
N/m² (Pa)	by	$9.8692x10^{-6}$	$1.0000x10^{-5}$	$2.9530x10^{-4}$	$4.0146x10^{-3}$	$7.5006x10^{-3}$	$1.0197x10^{-1}$	$1.0000x10^{-3}$	$1.0000x10^{-6}$	1	$1.4504x10^{-4}$
psi	by	$6.8046x10^{-2}$	$6.8947x10^{-2}$	2.0360	27.6810	51.7144	$7.0310x10^{-2}$	6.8948	$6.8948x10^{-3}$	$6.8948x10^{-3}$	1

Table 9.1 – Pressure conversion.

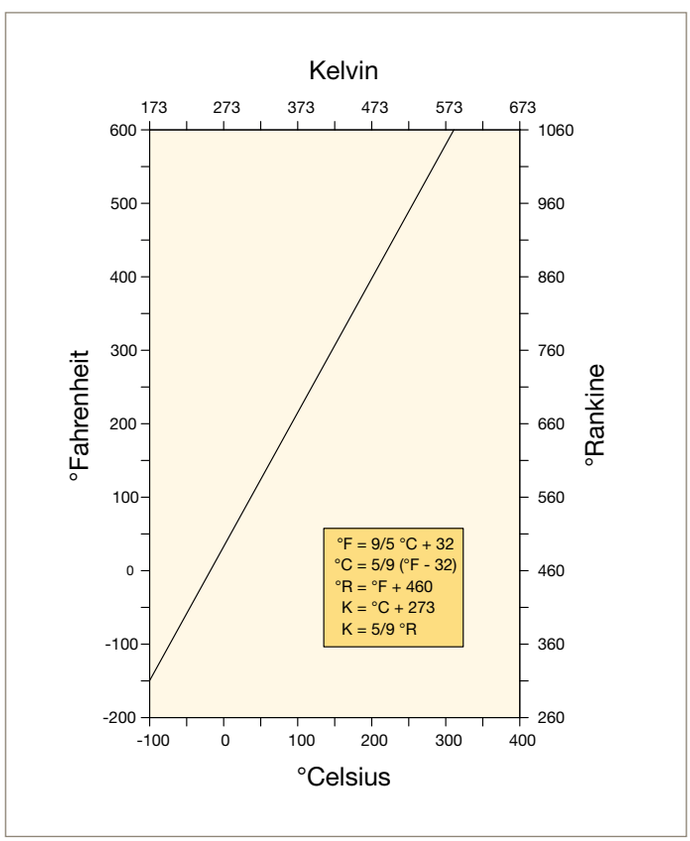

Fig. 9.2 – Temperature conversion.

9.2 Leak rate equivalents

cc/s	mbar l/s	Torr l/s	Pa m³/s	Approximate equivalent	Approximate 1 mm³ bubble equivalent
1	1.01	$7.6x10^{-1}$	$1.01x10^{-1}$	2x10-3 SCFM	Steady stream
$1x10^{-1}$	$1.01x10^{-1}$	$7.6x10^{-2}$	$1.01x10^{-2}$	1 cc every 10 seconds	Steady stream
$1x10^{-2}$	$1.01x10^{-2}$	$7.6x10^{-3}$	$1.01x10^{-3}$	1 cc every 100 seconds	10 per second
$1x10^{-3}$	$1.01x10^{-3}$	$7.6x10^{-4}$	$1.01x10^{-4}$	3 cc per hour	1 per second
$1x10^{-4}$	$1.01x10^{-4}$	$7.6x10^{-5}$	$1.01x10^{-5}$	1 cc every 3 hours	1 every 10 seconds
$1x10^{-5}$	$1.01x10^{-5}$	$7.6x10^{-6}$	$1.01x10^{-6}$	1 cc every 24 hours	1 every 100 seconds
$1x10^{-6}$	$1.01x10^{-6}$	$7.6x10^{-7}$	$1.01x10^{-7}$	1 cc every 2 weeks	3 per hour
$1x10^{-7}$	$1.01x10^{-7}$	$7.6x10^{-8}$	$1.01x10^{-8}$	3 cc per year	Bubbles too infrequent to observe
$1x10^{-8}$	$1.01x10^{-8}$	$7.6x10^{-9}$	$1.01x10^{-9}$	1 cc every 3 years	
$1x10^{-9}$	$1.01x10^{-9}$	$7.6x10^{-10}$	$1.01x10^{-10}$	1 cc every 30 years	
$1x10^{-10}$	$1.01x10^{-10}$	$7.6x10^{-11}$	$1.01x10^{-11}$	1 cc every 300 years	
$1x10^{-11}$	$1.01x10^{-11}$	$7.6x10^{-12}$	$1.01x10^{-12}$	1 cc every 3000 years	

Table 9.3 – Leak rate equivalents.

Notes

Notes

Parker-Prädifa Worldwide

AE – United Arab Emirates,
Dubai
Tel: +971 4 8127100
parker.me@parker.com

AR – Argentina, Buenos Aires
Tel: +54 3327 44 4129

AT – Austria, Wiener Neudorf
Tel: +43 2622 23501-0
parker.austria@parker.com

AU – Australia, Castle Hill
Tel: +61 2 9634 7777

AZ – Azerbaijan, Baku
Tel: +994 50 2233 458
parker.azerbaijan@parker.com

BE – Belgium, Boom
Tel: +32 3 880 81 50

BR – Brazil, Sao Paulo / SP
Tel: +55 11 39 15 8500

BY – Belarus, Minsk
Tel: +375 17 209 9399
parker.belarus@parker.com

CA – Canada, Milton, Ontario
Tel: +1 905 693 3000

CH – Switzerland, Etoy
Tel: +41 21 821 8700
parker.switzerland@parker.com

CL – Chile, Santiago
Tel: +56 2 623 1216

CN – China, Shanghai
Tel: +86 21 2899 5000

CZ – Czech Republic,
Klecany
Tel: +420 284 083 111
parker.czechrepublic@parker.com

DE – Germany,
Bietigheim-Bissingen
Tel: +49 7142 351 0

DK – Denmark, Espergaerde
Tel: +45 49 12 17 00

ES – Spain, Madrid
Tel: +34 91 6 75 73 00

ES – Spain, Barcelona
Tel: +34 93 6 35 51 73

FI – Finland, Vantaa
Tel: +358 20 753 2500
parker.finland@parker.com

FR – France,
Annemasse-Cédex
Tel: +33 4 50 87 80 80

GR – Greece
K Stamatiadis - E. Amplianitis
S.A., Athen
Tel: +30 10 5 15 11 11

HK – Hong Kong
Tel: +852 2428 8008

HU – Hungary, Budapest
Tel: +36 1 220 4155
parker.hungary@parker.com

IE – Ireland, Dublin
Tel: +353 1 466 6370
parker.ireland@parker.com

IN – India, Mumbai
Tel: +91 22 6513 7081-85

IT – Italy, Corsico (MI)
Tel: +39 02 45 19 21
parker.italy@parker.com

JP – Japan, Tokyo
Tel: +81 3 6408 3901

KR – Korea, Seoul
Tel: +82 2 559 0400

KZ – Kazakhstan, Almaty
Tel: +7 7272 505 800
parker.easteurope@parker.com

L – Luxembourg, Friederich-
Hydropart S.A.R.L., Schifflange
Tel: +352 54 52 44

MX – Mexico, Apodaca
Tel: +52 81 8156 6000

MY – Malaysia, Subang Jaya
Tel: +60 3 7849 0800

NL – Netherlands, Oldenzaal
Tel: +31 541 585 000
parker.nl@parker.com

NL – Netherlands
B. V. Profiltra, Almere
Tel: +31 36 53 2 42 28

NO – Norway
Norwegian Seals AS, Kleppe
Tel: +47 51 78 60 30

NO – Norway, Asker
Tel: +47 66 75 34 00
parker.norway@parker.com

NZ – New Zealand,
Mt Wellington
Tel: +64 9 574 1744

PL – Poland, Warsaw
Tel: +48 22 573 24 00
parker.poland@parker.com

PT – Portugal, Leca da Palmeira
Tel: +351 22 999 7360
parker.portugal@parker.com

RO – Romania, Bucharest
Tel: +40 21 252 1382
parker.romania@parker.com

RU – Russia, Moscow
Tel: +7 495 645 2156
parker.russia@parker.com

SE – Sweden, Spånga
Tel: +46 8 59 79 50 00
parker.sweden@parker.com

SG – Singapore
Tel: +65 6887 6300

SK – Slovakia, Banská Bystrica
Tel: +421 484 162 252
parker.slovakia@parker.com

SL – Slovenia, Novo Mesto
Tel: +386 7 337 6650
parker.slovenia@parker.com

TH – Thailand, Bangkok
Tel: +662 186 7000-99

TR – Turkey, Istanbul
Tel: +90 216 4997081
parker.turkey@parker.com

TW – Taiwan, Taipei
Tel: +886 2 2298 8987

UA – Ukraine, Kiev
Tel: +380 44 494 2731
parker.ukraine@parker.com

UK – United Kingdom, Glasgow
Tel: +44 141 302 5000

US – USA, Cleveland
Tel: +1 216 896 3000

VE – Venezuela, Caracas
Tel: +58 212 238 5422

ZA – South Africa,
Kempton Park
Tel: +27 11 961 0700
parker.southafrica@parker.com

© 2011 Parker Hannifin Corporation · Subject to change.

PDE 3354 GB · 03/2011

Parker Hannifin Corporation
Advanced Products NV
Rupelweg 9
2850 Boom · Belgium
Tel. +32 (0) 3 880 81 50 · +32 (0) 3 888 48 62
www.parker.com/packing-europe
e-mail: packing-europe@parker.com